YAMAHA

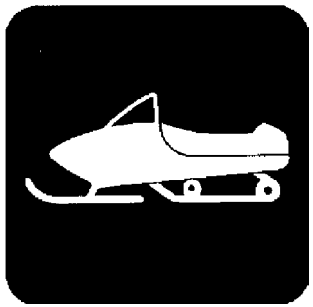

PARTS CATALOGUE

VK540EF (8KA1) EUROPE
VK540E (8KA1) RUSSIAN FEDERATION
VK540IV (8KA1) JAPAN

1P8KA-100E1

( )

YAMAHA
GENUINE
Parts & Accessories

VK540EF
VK540E/VK540IV
PARTS CATALOGUE
©2014 by Yamaha Motor Co., Ltd.
1st edition, March 2014
All rights reserved.
Any reprinting or unauthorized use
without the written permission of
Yamaha Motor Co., Ltd.
is expressly prohibited.
Printed in Japan.

FOREWORD

This Parts Catalogue is related to the parts for the model(s) on the cover page. When you are ordering replacement parts, please refer to this Parts Catalogue and quote both part numbers and part names correctly.

1. Modifications or additions which have been made after the issue of the Parts Catalogue will be announced in the Parts News.
   It is advisable that you make the necessary corrections to the Parts Catalogue according to the Parts News.

2. Abbreviations
   The following abbreviations are used in this Parts Catalogue.

   “UR” Use specified parts number.
   “UN” Use as many as needed.
   “AP” Alternate Parts
   “LM” Locally Made (Parts need to be ordered locally)
   “F#” Frame No. (Applicable machine No.)
   “O/S” Over Size

3. The number of components for assembly
   - Parts, which are to be supplied in an assembly, are listed with a dot (.) in front of the part name as shown below.
   - The numeral appearing to the right of each component part indicates the quantity of parts for each assembly unit.

PART NO.	DESCRIPTION	Q’TY	REMARKS
2F5–83310–60	FRONT FLASHER LIGHT ASSY	2	
115–83311–60	.BULB (6V–18W)	1	

4. Applicable colours of graphics are represented in the “REMARKS” as shown below.

PART NO.	DESCRIPTION	Q’TY	REMARKS
2N4–24110–00–X5	FUEL TANK COMP.	2	MXR
3J1–24240–10	.GRAPHIC, FUEL TANK	1	FOR MXR

5. Note that the illustrations for reference in finding parts numbers are not to be used for assembling. When assembling, please use the applicable service manual.

6. The asterisk (*) before a reference number indicates modified items after the first edition.

7. Applicable Serial No.

Engine Serial No.

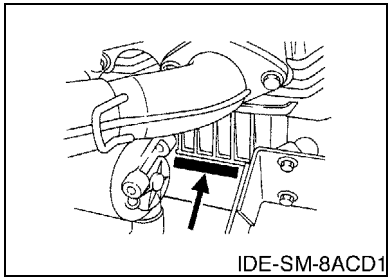

Frame Serial No.

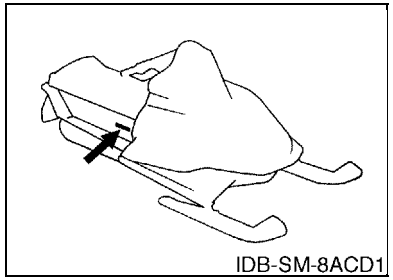

8. Applicable Colour Code (The (*) mark shows Model colour.)

Abbreviation	Colour Name	Colour Code
S3(*)	SILVER 3	0791
SMX(*)	BLACK METALLIC X	0903

9. Quantity Column Information

Column No.	Name Of Q'ty Column	Destination
1	EUR	EUROPE
2	RUS	RUSSIAN FEDERATION
3	JPN	JAPAN

10. Applicable Starting Serial No.

Frame Serial No.

Serial No.	Name Of Q'ty Column	Model Code
	EUR	8KA1
	RUS	8KA1
	JPN	8KA1

CONTENTS

ENGINE

CYLINDER HEAD 1
CRANKSHAFT & PISTON 2
AIR SHROUD & FAN 4
OIL PUMP 6
PUMP DRIVE GEAR 7
INTAKE 8
CARBURETOR 10
EXHAUST 12
CRANKCASE 13
STARTER 14

DRIVE

PRIMARY SHEAVE 15
SECONDARY SHEAVE 17

BODY

ENGINE BRACKET 18
OIL TANK 19
FRAME 20
SKI 23
STEERING 26
STEERING GATE 28
FUEL TANK 29
SEAT 31
BRAKE 32
CONTROL CABLE 33
TRACK SUSPENSION 1 34
TRACK SUSPENSION 2 37
TRACK SUSPENSION 3 40
TRACK DRIVE 1 41
TRACK DRIVE 2 42
TRACK DRIVE 3 45
SHROUD 47
EMBLEM 50
WINDSHIELD 51
GUARD & LUGGAGE BOX 52
BUMPER 53
INSTRUMENT PANEL 55

ELECTRICAL

GENERATOR 57
STARTING MOTOR 58
METER 59
HEADLIGHT 60
TAILLIGHT 61
HANDLE SWITCH & LEVER 62
ELECTRICAL 1 63
ELECTRICAL 2 65
ELECTRICAL 3 66
ALTERNATE REAR VIEW MIRROR 67
ALTERNATE REBUILD KIT 68
ALTERNATE CLUTCH TUNE UP KIT 69

INDEX

NUMERICAL INDEX 70

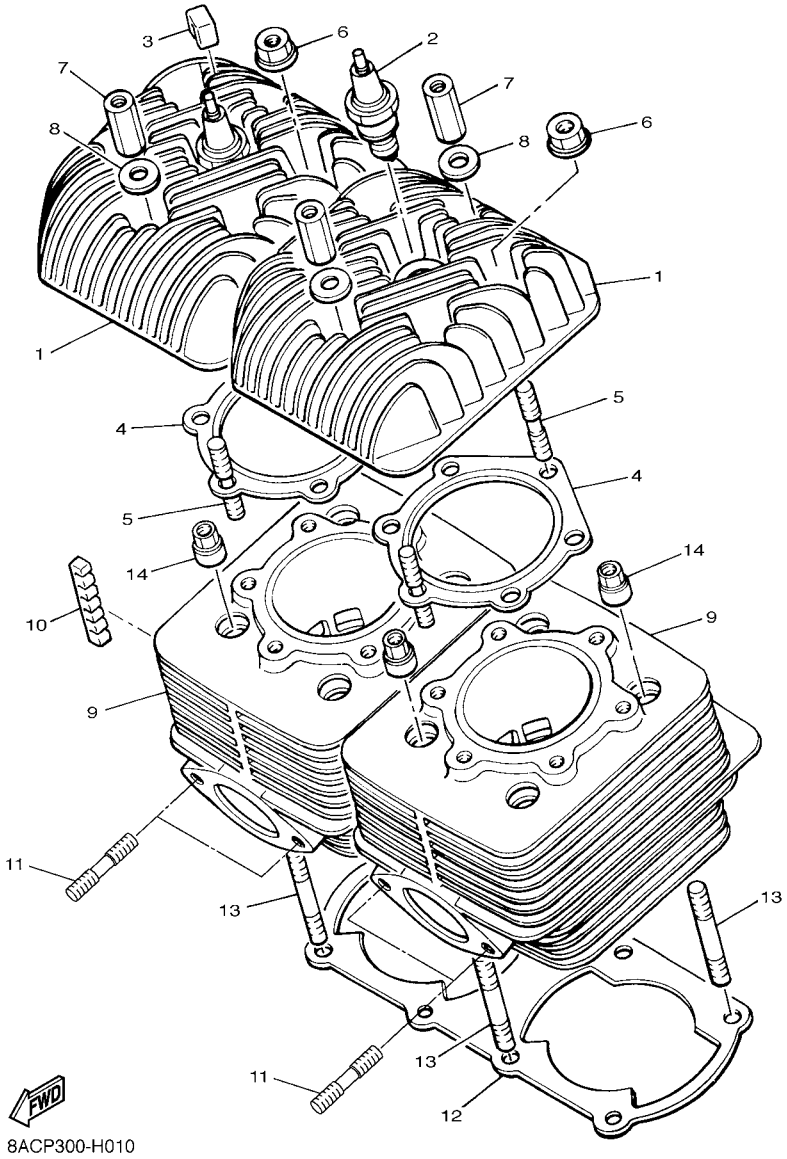

FIG. 1 CYLINDER HEAD

REF. NO.	PART NO.	DESCRIPTION	EUR	RUS	JPN			REMARKS
1	8R6–11111–00	HEAD, CYLINDER 1	2	2	2			
2	94702–00188	PLUG, SPARK (NGK BR9ES)	2	2				
	94709–00188	PLUG, SPARK (NGK BR9ES)			2			
3	83R–11161–00	ABSORBER 1	12	12	12			
4	83R–11181–00	GASKET, CYLINDER HEAD 1	2	2	2			
5	90116–08104	BOLT, STUD	12	12	12			
6	95707–08500	NUT, FLANGE	8	8	8			
7	90179–08269	NUT	4	4	4			
8	90201–08100	WASHER, PLATE	4	4	4			
9	83R–11311–00	CYLINDER 1	2	2	2			
10	83R–11162–00	ABSORBER 2	8	8	8			
11	95612–08318	BOLT, STUD	4	4	4			
12	89N–11351–00	GASKET, CYLINDER	1	1	1			
13	90116–08302	BOLT, STUD	8	8	8			
14	90179–08044	NUT	8	8	8			

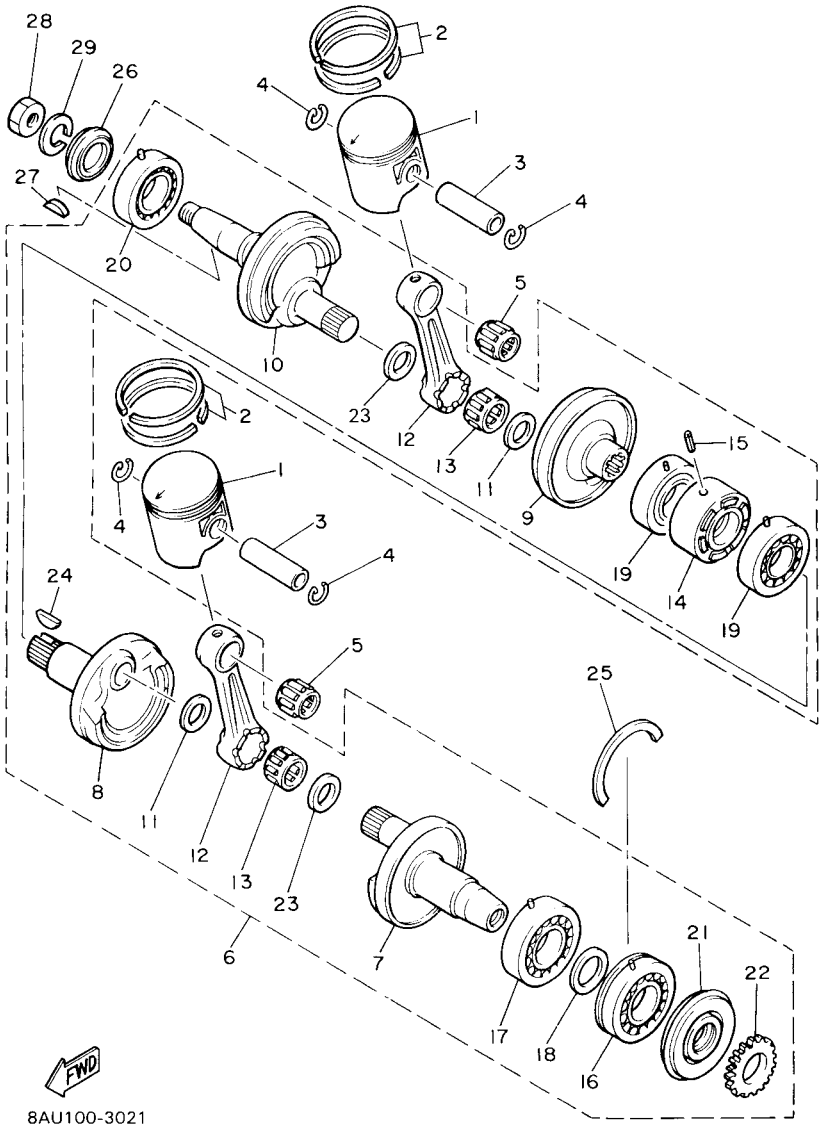

FIG. 2 CRANKSHAFT & PISTON

REF. NO.	PART NO.	DESCRIPTION	EUR	RUS	JPN			REMARKS
1	8R6–11631–00–95	PISTON (STD)	2	2	2			
	8R6–11635–00	PISTON (0.25MM O/S)	2	2	2			AP
	8R6–11636–00	PISTON (0.50MM O/S)	2	2	2			AP
2	8R6–11601–00	PISTON RING SET (STD)	2	2	2			
	8R6–11601–10	PISTON RING SET (0.25MM O/S)	2	2	2			AP
	8R6–11601–20	PISTON RING SET (0.50MM O/S)	2	2	2			AP
3	8H8–11633–00	PIN, PISTON	2	2	2			
4	93450–21053	CIRCLIP	4	4	4			
5	93310–320G0	BEARING	2	2	2			
6	8AT–11400–01	CRANKSHAFT ASSY	1	1	1			
7	83R–11412–01	.CRANK 1	1	1	1			
8	8H8–11422–01	.CRANK 2	1	1	1			
9	8H8–11432–01	.CRANK 3	1	1	1			
10	8AT–11442–00	.CRANK 4	1	1	1			
11	90209–24073	.WASHER	2	2	2			
12	8R6–11651–00	.ROD, CONNECTING	2	2	2			
13	93310–524K4	.BEARING	2	2	2			
14	8H8–11515–00	.SEAL, LABYRINTH 1	1	1	1			
15	91609–30010	.PIN, SPRING	1	1	1			
16	93306–30627	.BEARING	1	1	1			
17	93306–30628	.BEARING	1	1	1			
18	90201–33299	.WASHER, PLATE	1	1	1			
19	93306–20617	.BEARING	2	2	2			
20	93306–20620	.BEARING	1	1	1			
21	93103–32095	.OIL SEAL	1	1	1			
22	8K2–13178–00	.GEAR, PUMP DRIVE	1	1	1			
23	8A7–11685–00	.WASHER, CRANK PIN	2	2	2			

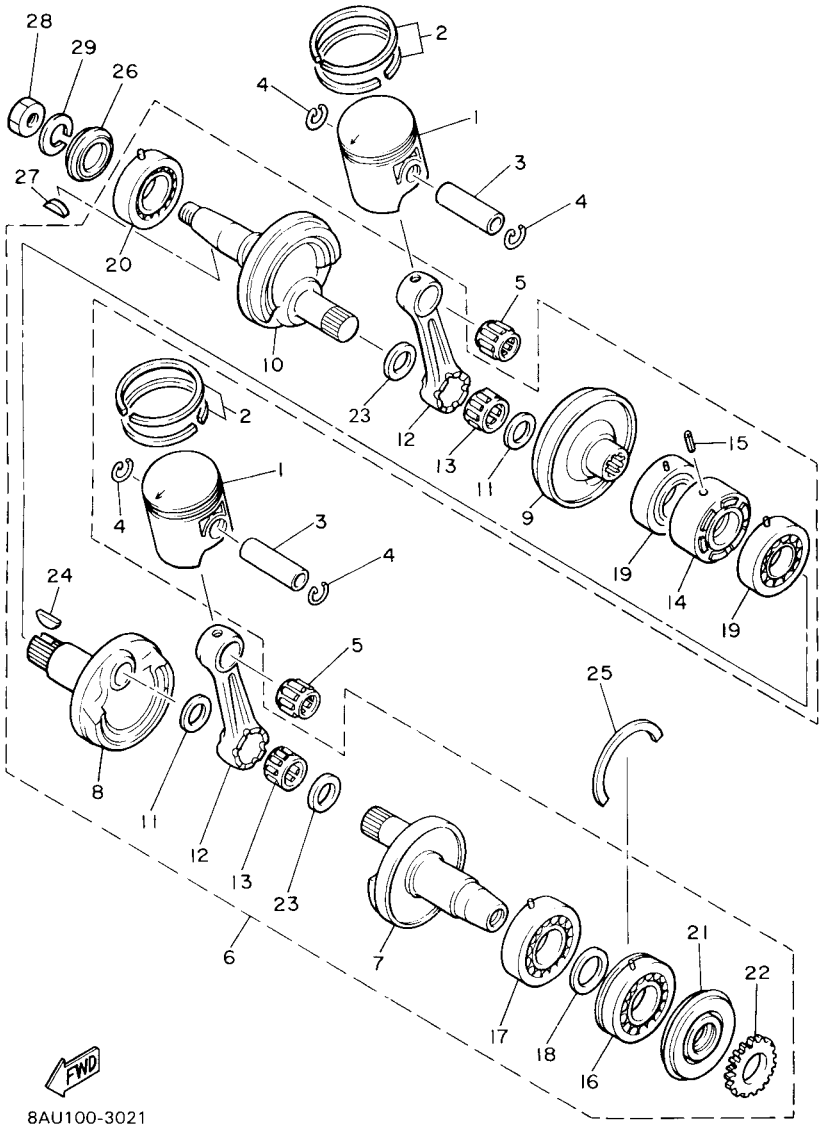

FIG. 2 CRANKSHAFT & PISTON

REF. NO.	PART NO.	DESCRIPTION	EUR	RUS	JPN			REMARKS
24	90280–05014	.KEY, WOODRUFF	1	1	1			
25	93440–78069	CIRCLIP	1	1	1			
26	93103–32156	OIL SEAL	1	1	1			
27	90280–05002	KEY, WOODRUFF	1	1	1			
28	90170–16425	NUT	1	1	1			
29	92907–16100	WASHER	1	1	1			

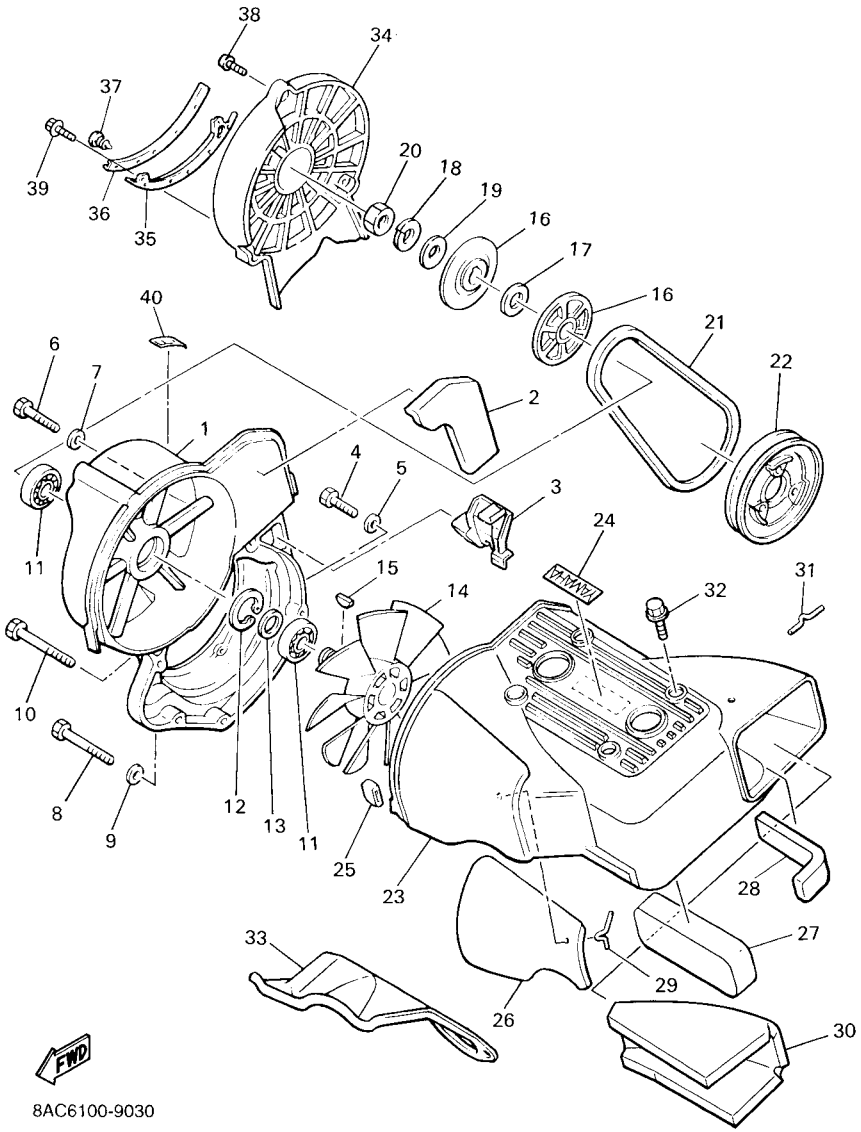

FIG. 3 AIR SHROUD & FAN

REF. NO.	PART NO.	DESCRIPTION	EUR	RUS	JPN			REMARKS
1	88F–12621–02	CASE, FAN	1	1	1			
2	8Y0–12679–00	DAMPER, SHROUD 6	1	1	1			
3	8Y0–12658–00	DAMPER, AIR SHROUD 1	1	1	1			
4	97027–08040	BOLT, HEXAGON	2	2	2			
5	92907–08600	WASHER, PLATE	2	2	2			
6	97022–08055	BOLT, HEXAGON	1	1	1			
7	92902–08600	WASHER, PLATE	1	1	1			
8	97027–08075	BOLT, HEXAGON	1	1	1			
9	92907–08600	WASHER, PLATE	1	1	1			
10	97027–08075	BOLT, HEXAGON	1	1	1			
11	93306–20315	BEARING	2	2	2			
12	99009–40500	CIRCLIP	1	1	1			
13	90201–17713	WASHER, PLATE	1	1	1			
14	8H8–12611–01	FAN	1	1	1			
15	90280–05014	KEY, WOODRUFF	1	1	1			
16	8H8–12619–01	PULLEY 2	2	2	2			
17	90214–17017	WASHER, CLAW (0.5T)	1	1	1			UR UN
	90214–17018	WASHER, CLAW (1.0T)	1	1	1			UR UN
18	92907–16100	WASHER	1	1	1			
19	90201–17713	WASHER, PLATE	1	1	1			
20	90170–16425	NUT	1	1	1			
21	8H8–12612–00	BELT	1	1	1			
22	8H8–12618–01	PULLEY 1	1	1	1			
23	8H8–12651–02	AIR SHROUD, CYLINDER 1	1	1	1			
24	99246–00080	EMBLEM, YAMAHA	1	1	1			
25	8H8–12658–00	DAMPER, AIR SHROUD 1	2	2	2			
26	8H8–12659–00	DAMPER, AIR SHROUD 2	1	1	1			

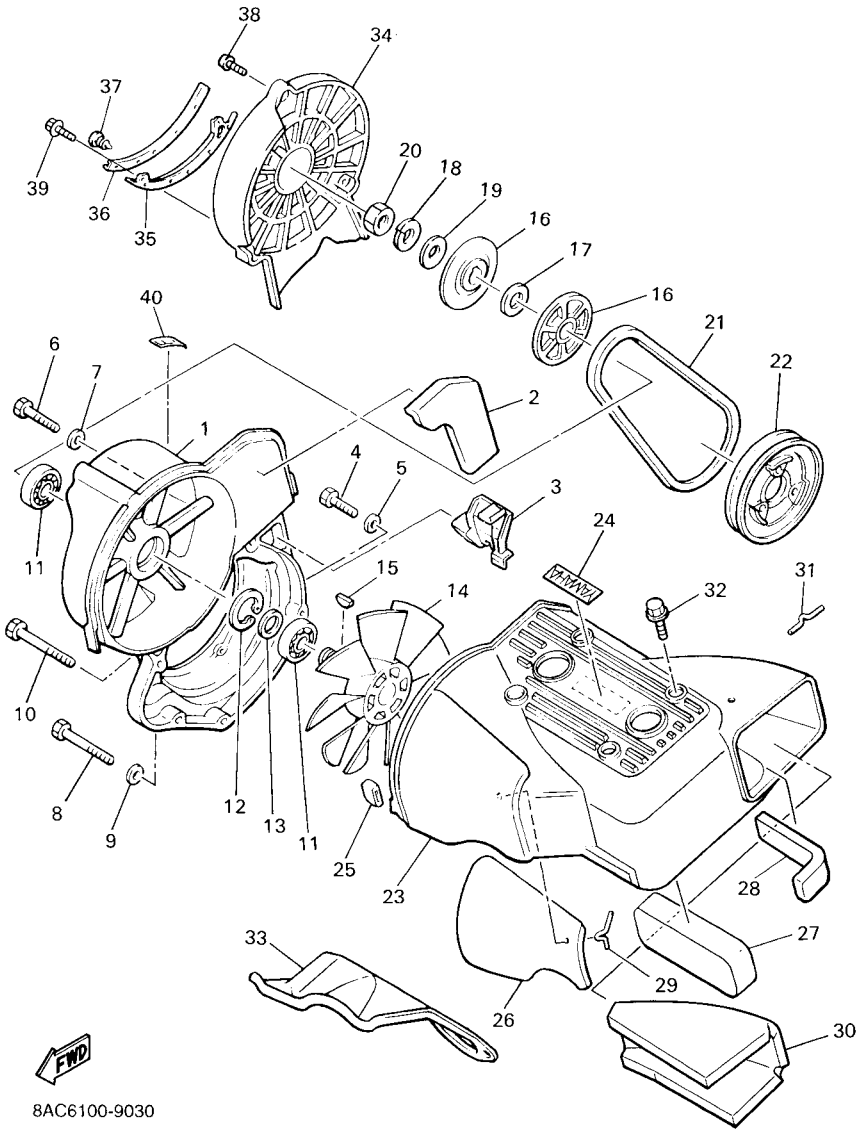

FIG. 3 AIR SHROUD & FAN

REF. NO.	PART NO.	DESCRIPTION	EUR	RUS	JPN			REMARKS
27	8H8–12669–00	DAMPER, AIR SHROUD 4	1	1	1			
28	8V8–12678–00	DAMPER, AIR SHROUD 5	1	1	1			
29	91401–16025	PIN, COTTER	3	3	3			
30	8AT–12679–00	DAMPER, SHROUD 6	1	1	1			
31	91401–16025	PIN, COTTER	3	3	3			
32	90119–06108	BOLT, WITH WASHER	4	4	4			
33	8H8–12652–00	AIR SHROUD, CYLINDER 2	1	1	1			
34	8L0–12616–00	COVER, FAN CASE	1	1	1			
35	8Y0–12637–02	STAY 1	1	1	1			
36	8Y0–12687–02	DAMPER,DUCT 4	1	1	1			
37	90269–05051	RIVET	5	5	5			
38	98902–06025	SCREW, BIND	2	2	2			
39	95802–06025	BOLT, FLANGE	1	1	1			
40	8AC–1262A–E0	LABEL, WARNING 2	1		1			
	8AC–1262A–R1	LABEL, WARNING 2		1				

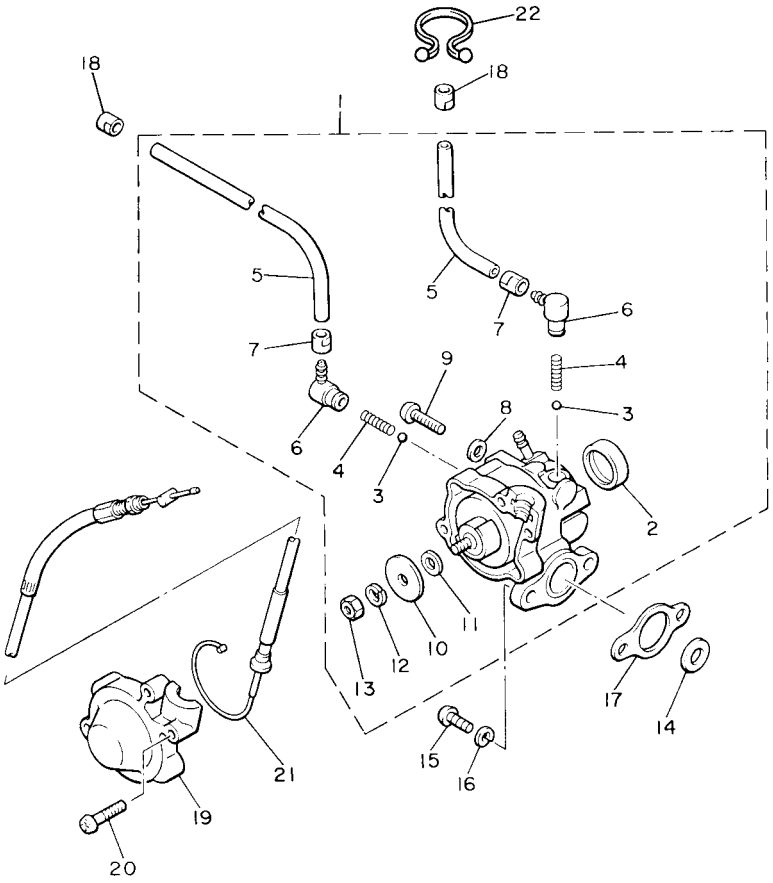

8AU100-3040

FIG. 4 OIL PUMP

REF. NO.	PART NO.	DESCRIPTION	EUR	RUS	JPN			REMARKS
1	8AT–13101–00	OIL PUMP ASSY	1	1	1			
2	90338–21075	.PLUG	1	1	1			
3	93505–32002	.BALL	2	2	2			
4	90501–02217	.SPRING, COMPRESSION	2	2	2			
5	91A30–03042	.TUBE, FLEXIBLE VINYL	2	2	2			
6	353–13552–01	.NOZZLE	2	2	2			
7	90468–02025	.CLIP	2	2	2			
8	90430–04004	.GASKET	1	1	1			
9	98902–04020	.SCREW, BIND	1	1	1			
10	137–13138–01	.PLATE, ADJUSTING	1	1	1			
11	137–13137–00	.SHIM, PLUNGER	1	1	1			
12	92901–05100	.WASHER, SPRING	1	1	1			
13	95301–05600	.NUT	1	1	1			
14	90201–08624	WASHER, PLATE	1	1	1			
15	98507–05016	SCREW, PAN HEAD	2	2	2			
16	92907–05100	WASHER, SPRING	2	2	2			
17	8Y0–13116–01	GASKET, PUMP CASE	1	1	1			
18	90468–02025	CLIP	2	2	2			
19	8A5–13146–01	COVER,ADJUST PULLEY	1	1	1			
20	98507–04018	SCREW, PAN HEAD	3	3	3			
21	8L8–26320–04	PUMP CABLE ASSY	1	1	1			
22	90464–16039	CLAMP	1	1	1			

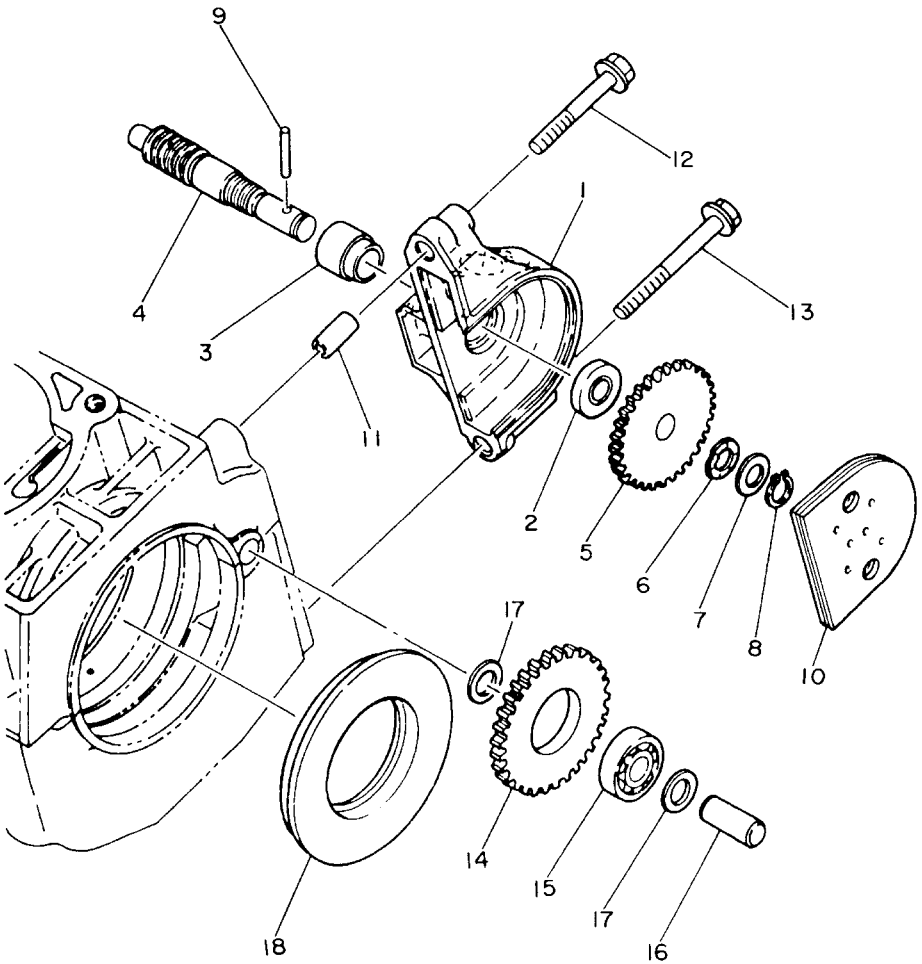

8AU100-3050

FIG. 5 PUMP DRIVE GEAR

REF. NO.	PART NO.	DESCRIPTION	EUR	RUS	JPN			REMARKS
1	8AT–15416–00	COVER, OIL PUMP	1	1	1			
2	93101–10001	OIL SEAL	1	1	1			
3	821–13176–00	METAL, WORM SHAFT OUTER	1	1	1			
4	866–13175–00	SHAFT, WORM	1	1	1			
5	821–13188–00	GEAR, DRIVE (32T)	1	1	1			
6	90206–11016	WASHER, WAVE	1	1	1			
7	137–13148–00	PLATE, CAM THRUST	1	1	1			
8	99009–10400	CIRCLIP	1	1	1			
9	93603–22028	PIN, DOWEL	1	1	1			
10	8K4–15426–00	COVER, OIL PUMP 2	1	1	1			
11	99530–08016	PIN, DOWEL	2	2	2			
12	95022–06040	BOLT, FLANGE	1	1	1			
13	95022–06055	BOLT, FLANGE	1	1	1			
14	8H8–13179–00	GEAR, IDLE (34T)	1	1	1			
15	93306–00002	BEARING	1	1	1			
16	8G8–13342–00	SHAFT, IDLE GEAR	1	1	1			
17	90201–10119	WASHER, PLATE	2	2	2			
18	8K4–13119–00	SEAL, GREASE	1	1	1			

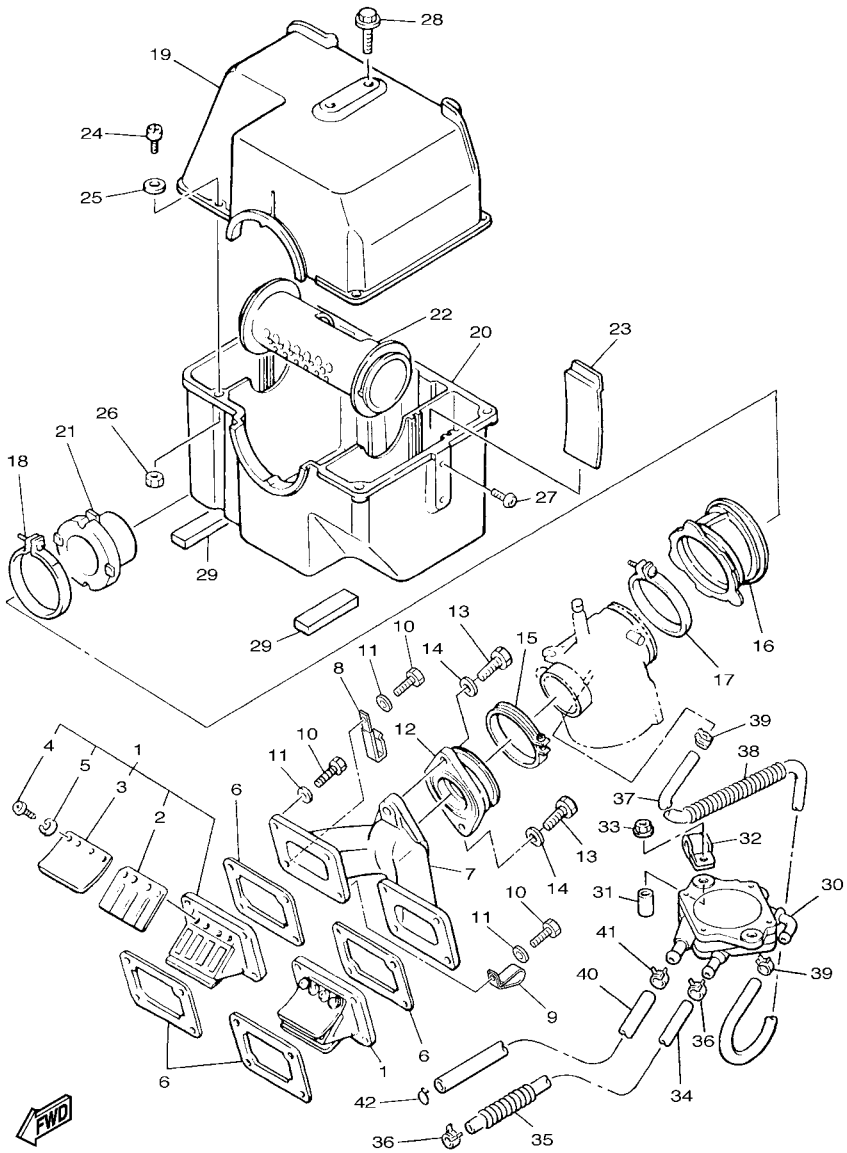

FIG. 6 INTAKE

REF. NO.	PART NO.	DESCRIPTION	EUR	RUS	JPN			REMARKS
1	8AT–13610–00	REED VALVE ASSY	2	2	2			
2	8AT–13613–00	.REED, VALVE	2	2	2			
3	8H8–13616–00	.STOPPER, REED VALVE	2	2	2			
4	98502–03008	.SCREW, PAN HEAD	8	8	8			
5	92902–03100	.WASHER	8	8	8			
6	8Y7–13556–01	GASKET, MANIFOLD	4	4	4			
7	83R–13565–00	JOINT, CARBURETOR	1	1	1			
8	90465–08277	CLAMP	1	1	1			
9	90461–10011	CLAMP	1	1	1			
10	97027–06025	BOLT, HEXAGON	8	8	8			
11	92907–06600	WASHER, PLATE	8	8	8			
12	8G8–13555–01	MANIFOLD, INTAKE	1	1	1			
13	97007–08025	BOLT	2	2	2			
14	92907–08600	WASHER, PLATE	2	2	2			
15	90460–56073	CLAMP, HOSE	1	1	1			
16	83R–14453–00	JOINT, AIR CLEANER 1	1	1	1			
17	90460–68230	CLAMP, HOSE	1	1	1			
18	90450–99050	HOSE CLAMP ASSY	1	1	1			
19	8H8–14431–00	SILENCER, INTAKE 1	1	1	1			
20	8H8–14441–00	SILENCER, INTAKE 2	1	1	1			
21	83R–14465–00	PIPE	1	1	1			
22	8H8–14466–00	PIPE	1	1	1			
23	8H8–14477–00	PLATE	2	2	2			
24	98502–05016	SCREW, PAN HEAD	5	5	5			
25	92902–05600	WASHER, PLATE	5	5	5			
26	95302–05700	NUT	5	5	5			
27	98502–06010	SCREW, PAN HEAD	2	2	2			

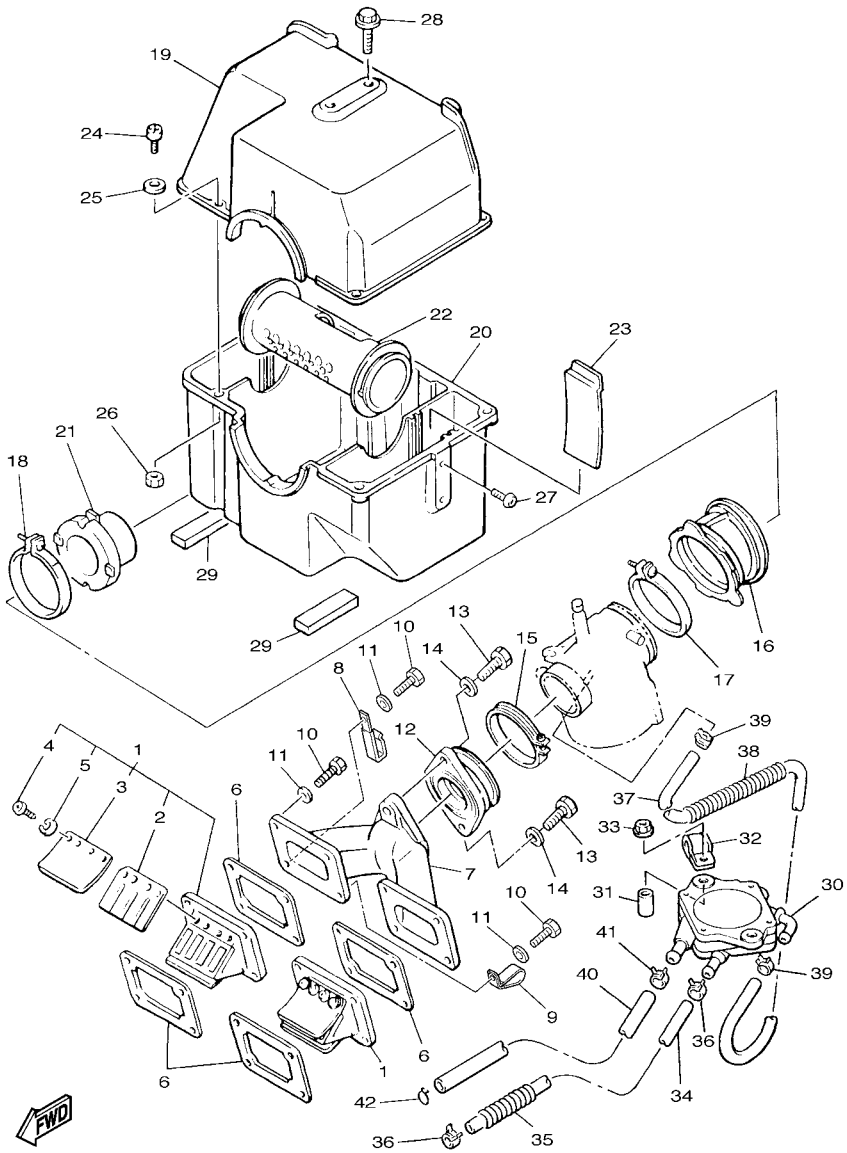

FIG. 6 INTAKE

REF. NO.	PART NO.	DESCRIPTION	EUR	RUS	JPN			REMARKS
28	90109–065E6	BOLT	2	2	2			
29	83R–14425–00	DAMPER 1	2	2	2			
30	8AT–24410–00	FUEL PUMP ASSY	1	1	1			
31	90387–063W4	COLLAR	2	2	2			
32	90465–08316	CLAMP	1	1	1			
33	95702–06500	NUT, FLANGE	2	2	2			
34	90445–11735	HOSE (L320)	1	1	1			
35	90501–084G9	SPRING, COMPRESSION	1	1	1			
36	90467–11032	CLIP	2	2	2			
37	90445–092K1	HOSE (L420)	1	1	1			
38	90501–084J0	SPRING, COMPRESSION	1	1	1			
39	90467–09026	CLIP	2	2	2			
40	90445–114K5	HOSE (L80)	1	1	1			
41	90467–11032	CLIP	1	1	1			
42	90467–11009	CLIP	1	1	1			

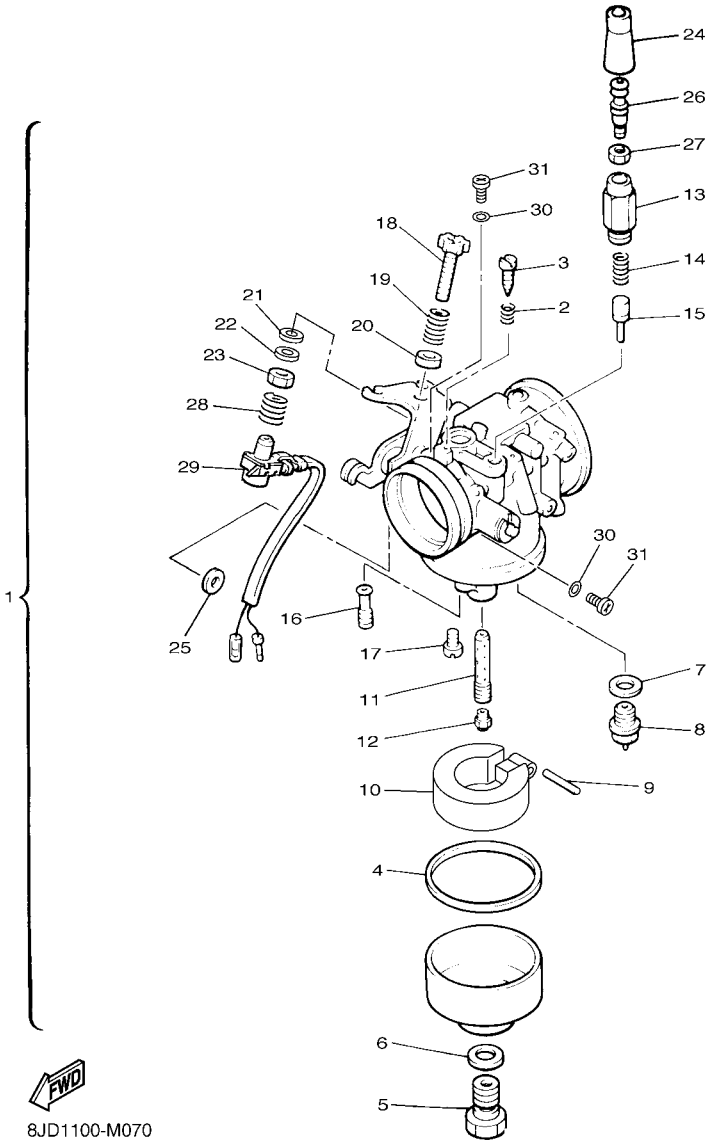

FIG. 7 CARBURETOR

REF. NO.	PART NO.	DESCRIPTION	EUR	RUS	JPN			REMARKS
1	84R–14101–03	CARBURETOR ASSY 1	1	1				
	86R–14101–03	CARBURETOR ASSY 1			1			
2	82A–14134–00	.SPRING, AIR ADJUSTING	1	1	1			
3	620–14211–00	.SCREW, PILOT ADJUSTING	1	1	1			
4	8M6–14126–00	.GASKET	1	1	1			
5	8M6–14261–00	.HOLDER	1	1	1			
6	286–14198–00	.GASKET	1	1	1			
7	214–14195–00	.WASHER, NEEDLE VALVE	1	1	1			
8	83R–14190–15	.NEEDLE VALVE ASSY	1	1	1			
9	68V–14186–00	.PIN, FLOAT	1	1				
	8M6–14186–00	.PIN, FLOAT			1			
10	8M6–14185–00	.FLOAT	1	1	1			
11	83R–14941–4E	.NOZZLE, MAIN	1	1	1			
12	3G2–1414E–56	.JET, MAIN (#141.3)	1	1	1			STD
	3G2–14231–77	.JET, MAIN (#132.5)	1	1	1			AP
	3G2–14231–27	.JET, MAIN (#135)	1	1	1			AP
	3G2–14231–78	.JET, MAIN (#137.5)	1	1	1			AP
	3G2–14231–28	.JET, MAIN (#140)	1	1	1			AP
	3G2–14231–79	.JET, MAIN (#142.5)	1	1	1			AP
13	8U9–14174–00	.CAP, PLUNGER	1	1				
	8G8–14174–00	.CAP, PLUNGER			1			
14	127–14135–00	.COIL, SPRING	1	1	1			
15	8G8–14171–00	.PLUNGER, STARTER	1	1	1			
16	193–14142–90	.JET, PILOT (# 90)	1	1	1			STD
	193–1414F–00	.JET, PILOT (# 100)	1	1	1			AP
17	8V0–14118–00	.CAP	2	2	2			
18	89A–14125–00	.SCREW	1	1				

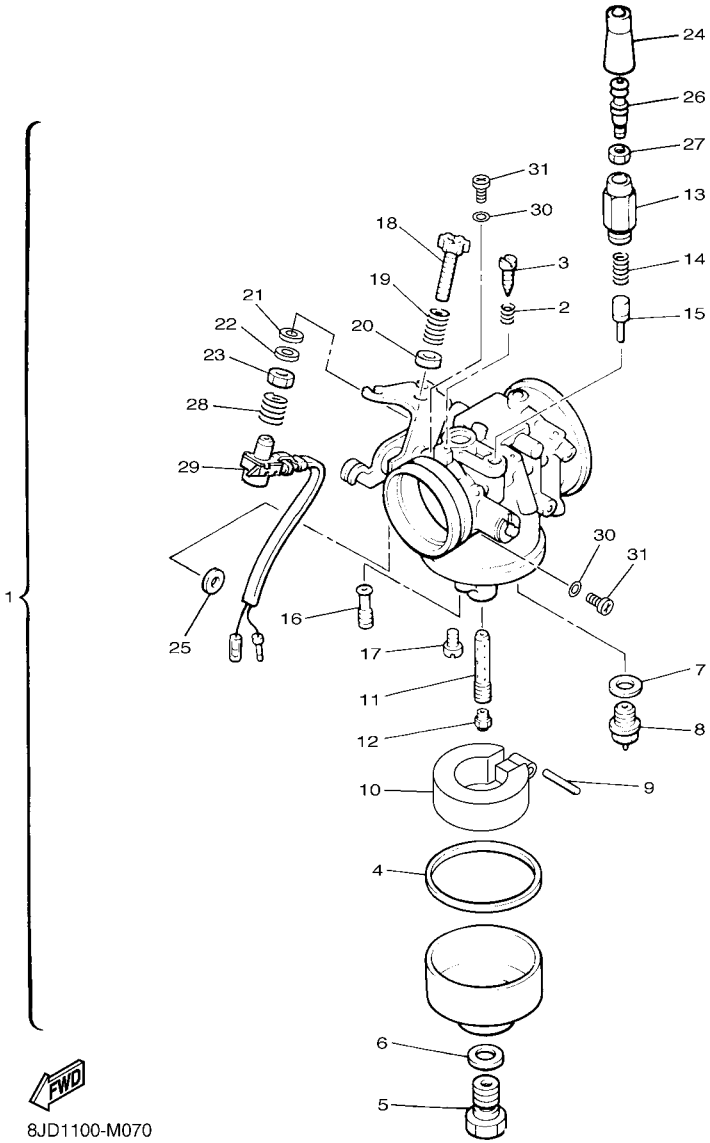

8JD1100-M070

FIG. 7 CARBURETOR

REF. NO.	PART NO.	DESCRIPTION	EUR	RUS	JPN			REMARKS
18	80L–14122–00	.SCREW, THROTTLE			1			
19	2J2–14133–00	.SPRING, THROTTLE STOP	1	1				
	8X0–14500–00	.SPRING			1			
20	89A–14265–00	.COLLAR	1	1				
	8X0–14184–00	.RING			1			
21	22F–14117–00	.WASHER, PLUG SCREW	1	1	1			
22	1UF–14952–00	.WASHER	1	1	1			
23	8X0–14358–00	.NUT	1	1	1			
24	8A7–14169–00	.CAP	1	1	1			
25	80L–14227–00	.WASHER	1	1	1			
26	127–14124–20	.SCREW, CABLE ADJUSTING	1	1	1			
27	802–14161–00	.NUT, CABLE ADJUSTING	1	1	1			
28	89A–24529–00	.SPRING	1	1				
	8X0–14133–00	.SPRING, THROTTLE STOP			1			
29	87S–8259A–01	.SWITCH, CARBURETOR	1	1	1			
30	256–14956–01	.WASHER	2	2	2			
31	3DM–14216–00	.SCREW	2	2	2			

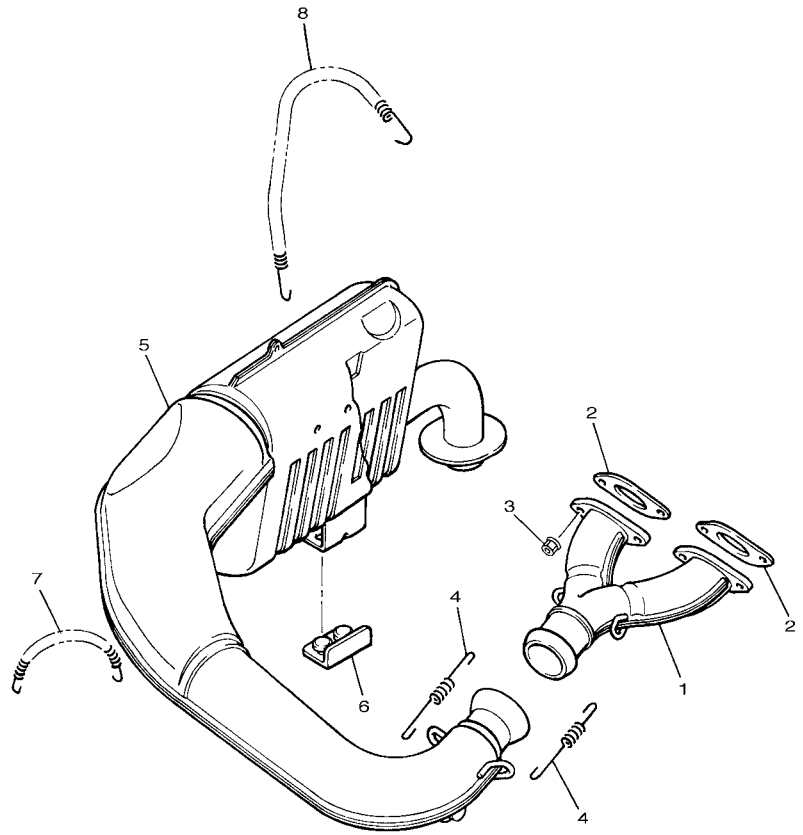

8ACP300-H080

FIG. 8 EXHAUST

REF. NO.	PART NO.	DESCRIPTION	EUR	RUS	JPN			REMARKS
1	8K4–14610–00	EXHAUST PIPE ASSY 1	1	1	1			
2	82M–14613–01	GASKET, EXHAUST PIPE	2	2	2			
3	95602–08200	NUT, SELF-LOCKING	4	4	4			
4	90506–20272	SPRING, TENSION	2	2	2			
5	83R–14710–04	MUFFLER ASSY 1	1	1	1			
6	83R–14728–01	PROTECTOR, MUFFLER 2	1	1	1			
7	90507–16045	SPRING, TENSION	1	1	1			
8	90507–16046	SPRING, TENSION	1	1	1			

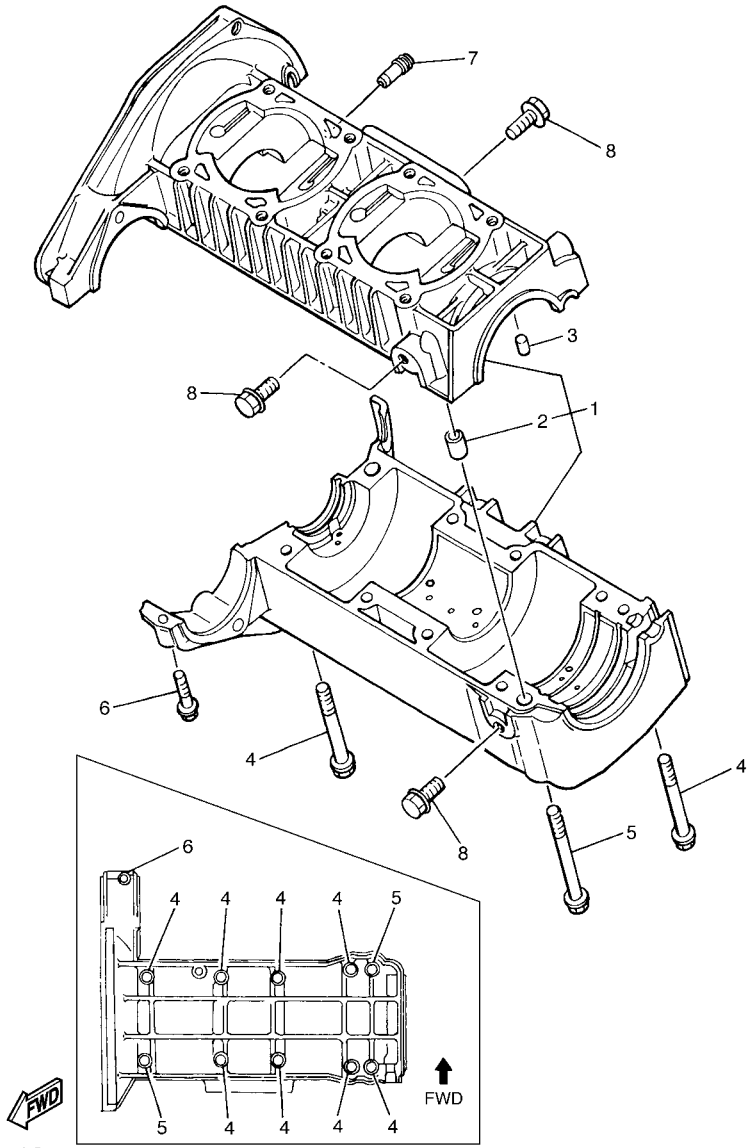

FIG. 9 CRANKCASE

REF. NO.	PART NO.	DESCRIPTION	EUR	RUS	JPN			REMARKS
1	8H8–15100–02	CRANKCASE ASSY	1	1	1			
2	91830–22016	.PIN, DOWEL	2	2	2			
3	93604–07141	PIN, DOWEL	2	2	2			
4	95827–08075	BOLT, FLANGE	8	8	8			
5	95827–08085	BOLT, FLANGE	2	2	2			
6	95822–06030	BOLT, FLANGE	1	1	1			
7	J38–11116–00	JOINT, BREATHER	1	1	1			
8	95822–08016	BOLT, FLANGE	6	6	6			

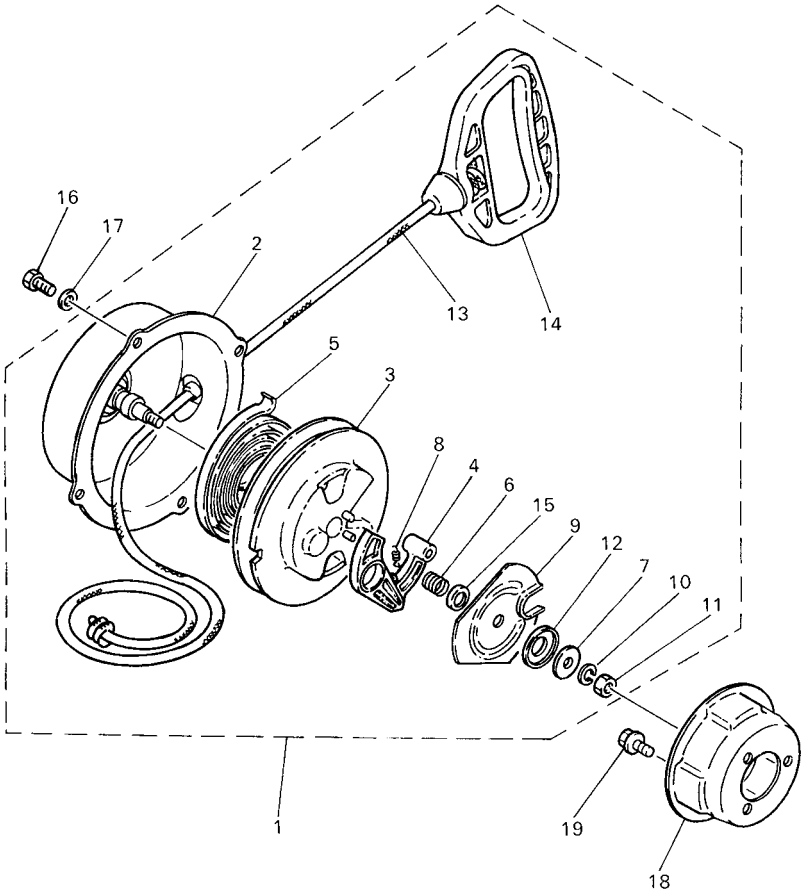

8AC3100-6110

FIG. 10 STARTER

REF. NO.	PART NO.	DESCRIPTION	EUR	RUS	JPN			REMARKS
1	8H8–15710–00	STARTER ASSY	1	1	1			
2	8H8–15711–00	.CASE, STARTER	1	1	1			
3	8F3–15714–01	.DRUM, SHEAVE	1	1	1			
4	8F3–15741–01	.PAWL, DRIVE	1	1	1			
5	8F3–15713–01	.SPRING, STARTER	1	1	1			
6	8F3–15715–00	.SPRING, FRICTION	1	1	1			
7	8F3–15739–01	.WASHER, THRUST	1	1	1			
8	8F3–15734–00	.SPRING, RETURN	1	1	1			
9	8F3–15716–03	.PLATE, DRIVE	1	1	1			
10	92901–06100	.WASHER, SPRING	1	1	1			
11	95301–06700	.NUT	1	1	1			
12	8G5–15739–00	.WASHER, THRUST	1	1	1			
13	8F3–15751–00	.WIRE, STARTER	1	1	1			
14	8F3–15755–00	.HANDLE, STARTER	1	1	1			
15	8G5–15716–00	.COLLAR	1	1	1			
16	97007–06014	BOLT	4	4	4			
17	92907–06600	WASHER, PLATE	4	4	4			
18	8H8–15723–01	PULLEY, STARTER	1	1	1			
19	95822–08016	BOLT, FLANGE	3	3	3			

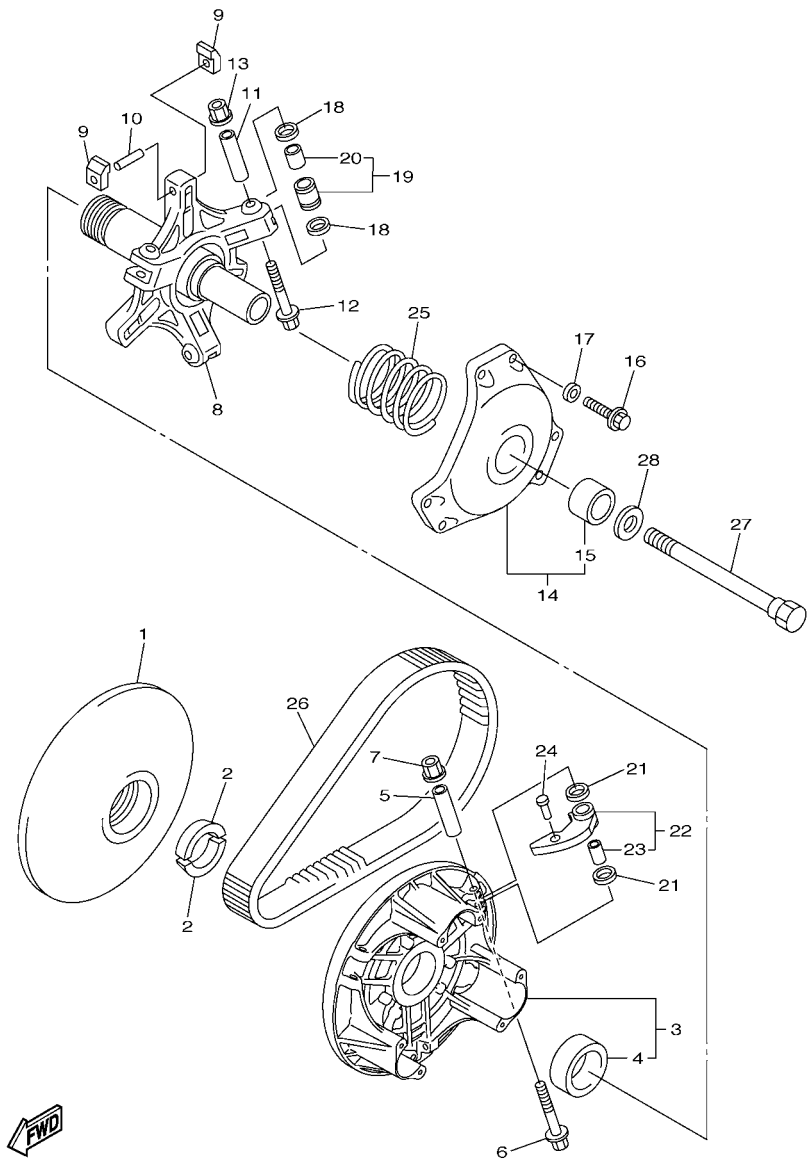

8ACT100-K110

FIG. 11 PRIMARY SHEAVE

REF. NO.	PART NO.	DESCRIPTION	EUR	RUS	JPN			REMARKS
1	8FA–17611–01	SHEAVE, PRIMARY FIXED	1	1	1			
2	8V0–17639–00	STOPPER	2	2	2			
3	8BV–17620–03	PRIMARY SLIDING SHEAVE COMP.	1	1	1			
4	90384–41242	.BUSH, BIMETAL FORMED	1	1	1			
5	90387–0514T	COLLAR	3	3	3			
6	90105–05644	BOLT, FLANGE	3	3	3			
7	95602–05200	NUT, SELF-LOCKING	3	3	3			
8	8ES–17640–02	SPIDER COMPLETE	1	1	1			
9	8BW–17653–00	SLIDER	6	6	6			
10	91609–50032	PIN, SPRING	3	3	3			
11	90387–0514U	COLLAR	3	3	3			
12	90105–05644	BOLT, FLANGE	3	3	3			
13	95602–05200	NUT, SELF-LOCKING	3	3	3			
14	8BV–17630–11	PRIMARY SHEAVE CAP COMP.	1	1	1			
15	90380–28237	.BUSH, SOLID	1	1	1			
16	97017–06030	BOLT	6	6	6			
17	92907–06600	WASHER, PLATE	6	6	6			
18	90202–09227	WASHER, PLATE	6	6	6			
19	8FG–17624–00	ROLLER, COMP	3	3	3			
20	90386–09001	.BUSH	1	1	1			
21	90202–08204	WASHER, PLATE	6	6	6			
22	8AT–17605–10	WEIGHT COMP	3	3	3			
23	90386–08002	.BUSH	1	1	1			
24	90261–06033	RIVET, COUNTERSUNK (ST17.2MM)	3	3	3			STD
	90261–06015	RIVET, COUNTERSUNK (ST10.3MM)	3	3	3			AP
	90261–06019	RIVET, COUNTERSUNK (ST13.3MM)	3	3	3			AP
25	90501–556G6	SPRING, COMPRESSION	1	1	1			STD (BLUE)

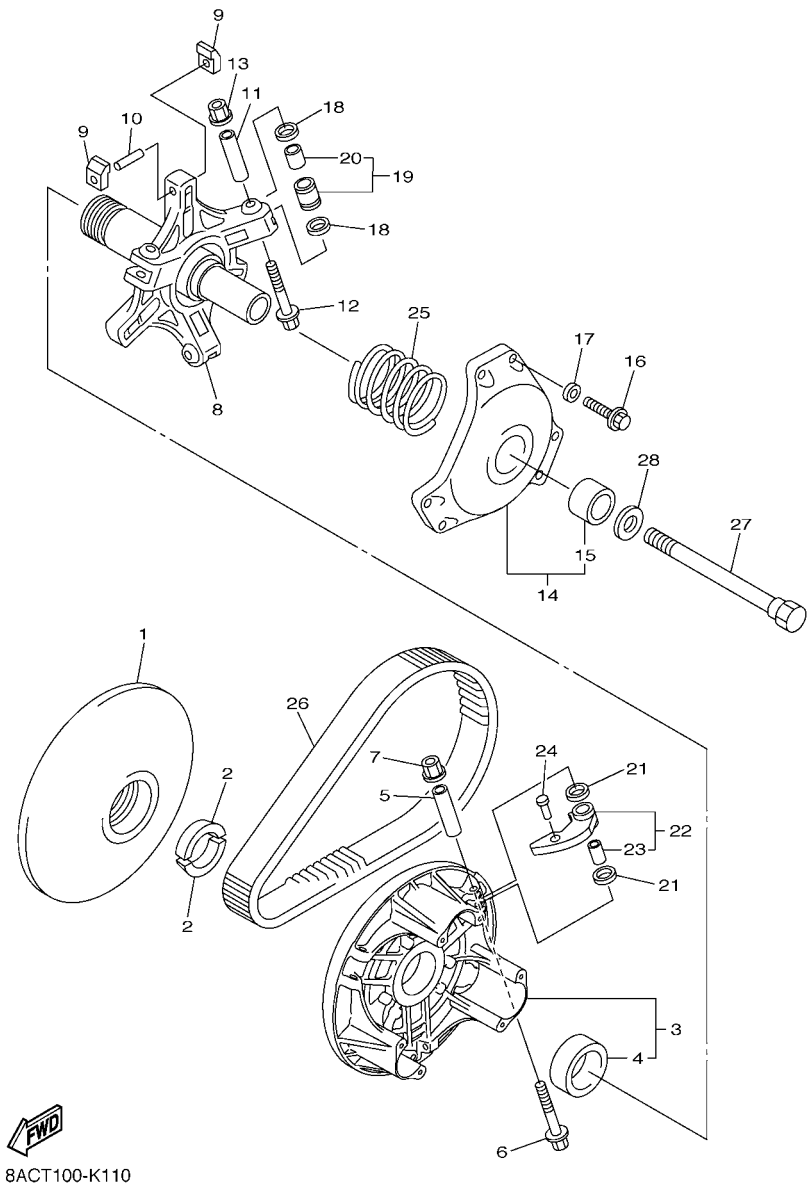

FIG. 11 PRIMARY SHEAVE

REF. NO.	PART NO.	DESCRIPTION	EUR	RUS	JPN			REMARKS
25	90501–556G7	SPRING, COMPRESSION	1	1	1			AP (Y-BL-Y)
	90501–606G9	SPRING, COMPRESSION	1	1	1			AP (P-BL-P)
26	8DN–17641–01	V-BELT	1	1	1			
27	8V0–17647–00	BOLT (L=156.5MM)	1	1	1			
28	92907–16100	WASHER	1	1	1			

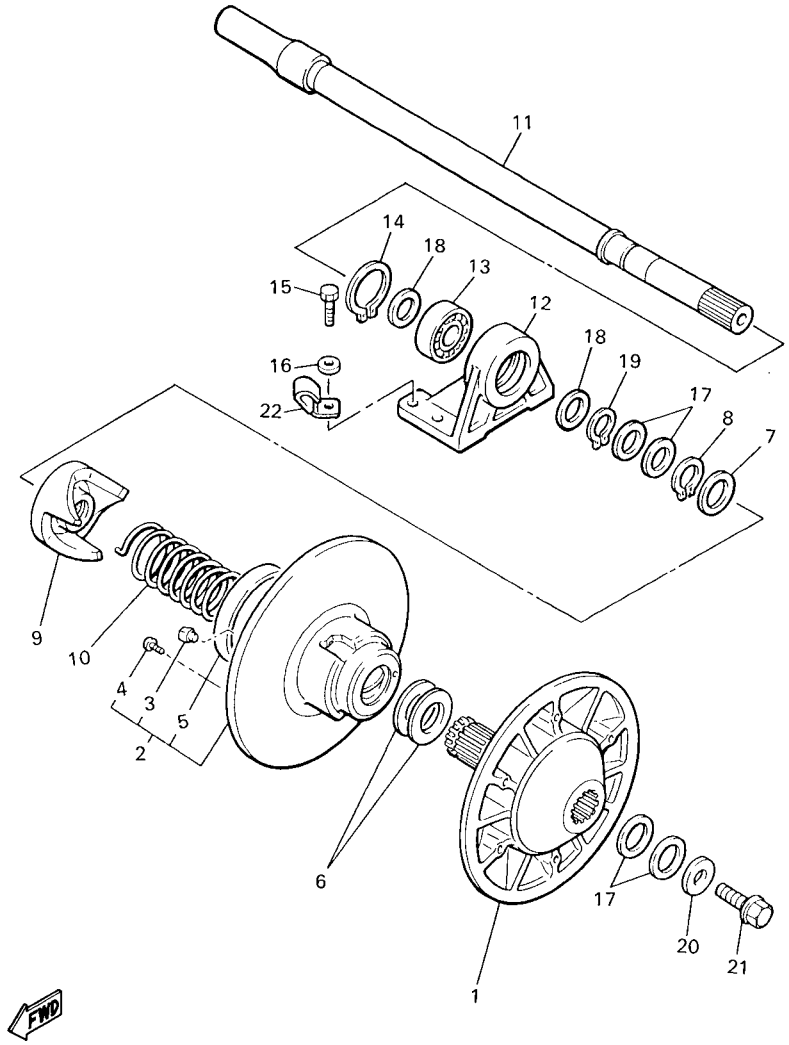

8AC6100-9120

FIG. 12 SECONDARY SHEAVE

REF. NO.	PART NO.	DESCRIPTION	EUR	RUS	JPN			REMARKS
1	88R–17660–03	SECONDARY FIXED SHEAVE COMP.	1	1	1			
2	8AT–17670–01	SECONDARY SLIDING SHEAVE	1	1	1			
3	8X6–17688–00	.SHOE, RAMP	3	3	3			
4	90154–06062	.SCREW, BINDING	3	3	3			
5	90384–90081	.BUSH, BIMETAL FORMED	1	1	1			
6	90201–345G2	WASHER, PLATE	2	2	2			
7	90214–29060	WASHER, CLAW	1	1	1			
8	93440–34170	CIRCLIP	1	1	1			
9	8AT–17684–01	SEAT, SECONDARY SPRING	1	1	1			
10	90508–55012	SPRING, TORSION	1	1	1			
11	88N–17680–02	SECONDARY SHAFT COMP.	1	1	1			
12	88N–47631–00	HOUSING, BEARING	1	1	1			
13	93306–20582	BEARING	1	1	1			
14	99009–52500	CIRCLIP	1	1	1			
15	97027–08020	BOLT, HEXAGON	4	4	4			
16	92907–08600	WASHER, PLATE	4	4	4			
17	90201–252F1	WASHER, PLATE (T0.5)	1	1	1			UR UN
	90201–25527	WASHER, PLATE (T1.0)	2	2	2			UR UN
	90201–25526	WASHER, PLATE (T2.0)	2	2	2			UR UN
18	90201–257J2	WASHER, PLATE	2	2	2			
19	93410–25017	CIRCLIP	1	1	1			
20	90201–104A7	WASHER, PLATE	1	1	1			
21	95812–10020	BOLT, FLANGE	1	1	1			
22	90465–08316	CLAMP	1	1	1			

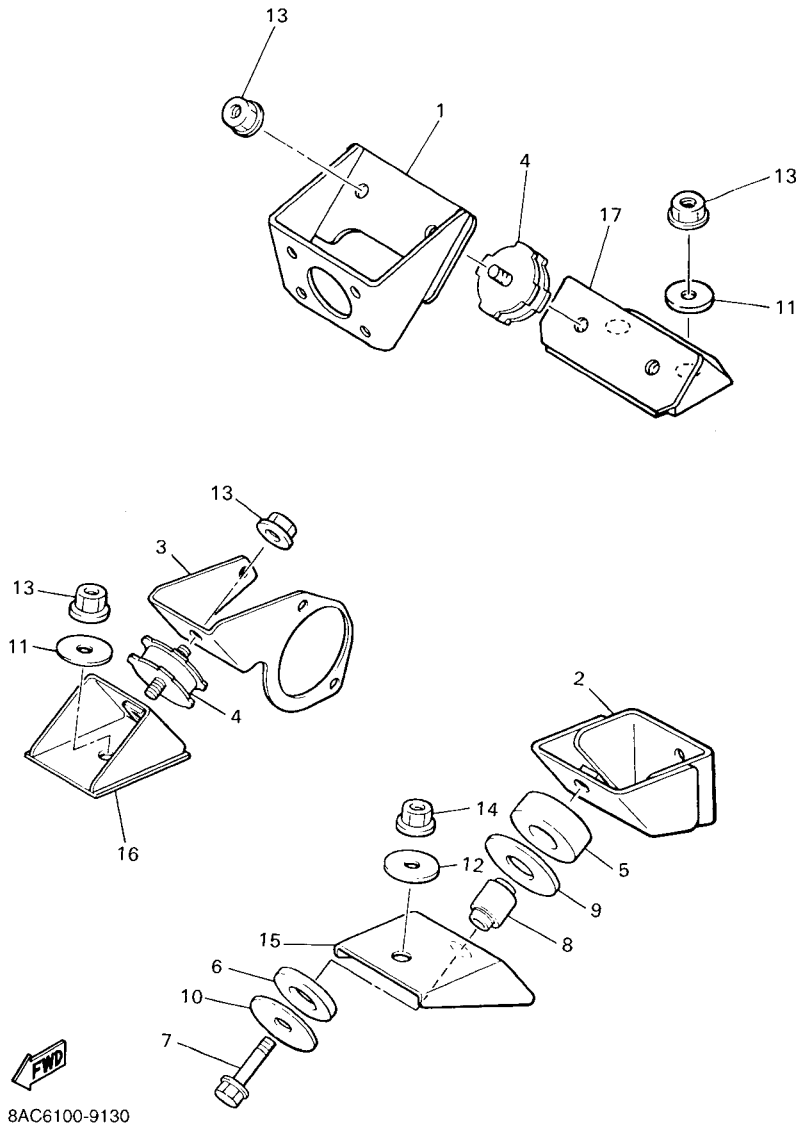

FIG. 13 ENGINE BRACKET

REF. NO.	PART NO.	DESCRIPTION	EUR	RUS	JPN			REMARKS
1	8H8–21411–01	BRACKET, ENGINE 1	1	1	1			
2	83R–21419–01	BRACKET, ENGINE 2	1	1	1			
3	8H8–21429–01	BRACKET, ENGINE 3	1	1	1			
4	8N7–21486–00	DAMPER 2	3	3	3			
5	8V9–21485–00	DAMPER, RUBBER 1	1	1	1			
6	8V9–21486–00	DAMPER 2	1	1	1			
7	95812–10045	BOLT, FLANGE	1	1	1			
8	90380–10129	BUSH, SOLID	1	1	1			
9	90201–257G7	WASHER, PLATE	1	1	1			
10	90201–107G8	WASHER, PLATE	1	1	1			
11	90201–10321	WASHER, PLATE	3	3	3			
12	90201–12317	WASHER, PLATE	1	1	1			
13	95702–10500	NUT, FLANGE	6	6	6			
14	95702–12500	NUT, FLANGE	1	1	1			
15	8AT–21417–00	BRACKET, FRONT LOWER 1	1	1	1			
16	8H8–21418–01	BRACKET, FRONT LOWER 2	1	1	1			
17	8H8–21427–00	BRACKET, REAR LOWER 1	1	1	1			

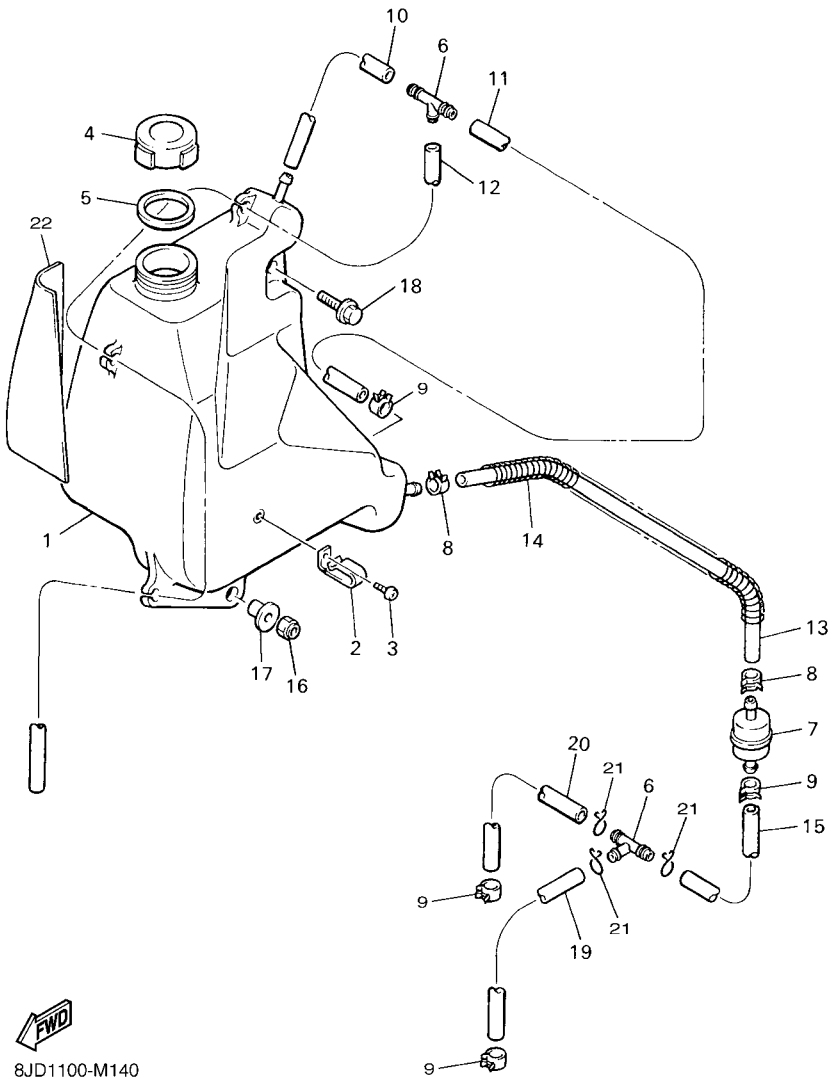

FIG. 14 OIL TANK

REF. NO.	PART NO.	DESCRIPTION	EUR	RUS	JPN			REMARKS
1	83R–21751–00	TANK, OIL	1	1	1			
2	90462–10209	CLAMP	1	1	1			
3	98902–06010	SCREW, BIND	1	1	1			
4	863–21771–00	BODY, CAP	1	1	1			
5	90430–31003	GASKET	1	1	1			
6	801–24376–00	PIPE, JOINT 1	2	2	2			
7	8G8–13410–00	STRAINER HOUSING ASSY	1	1	1			
8	90467–11032	CLIP	2	2	2			
9	90467–09026	CLIP	4	4	4			
10	91A30–05010	TUBE, FLEXIBLE VINYL	1	1	1			
11	91A30–05120	TUBE, FLEXIBLE VINYL	1	1	1			
12	91A30–05085	TUBE, FLEXIBLE VINYL	1	1	1			
13	91A30–07016	TUBE, FLEXIBLE VINYL	1	1	1			
14	84M–24327–00	PROTECTOR, PIPE	1	1	1			
15	91A30–05004	TUBE, FLEXIBLE VINYL	1	1	1			
16	95602–06100	NUT, U	1	1	1			
17	90387–061U9	COLLAR	2	2	2			
18	95802–06016	BOLT, FLANGE	1	1	1			
19	91A30–05052	TUBE, FLEXIBLE VINYL	1	1	1			
20	91A30–05060	TUBE, FLEXIBLE VINYL	1	1	1			
21	90467–08017	CLIP	3	3	3			
22	8AT–21747–00	DAMPER	1	1	1			

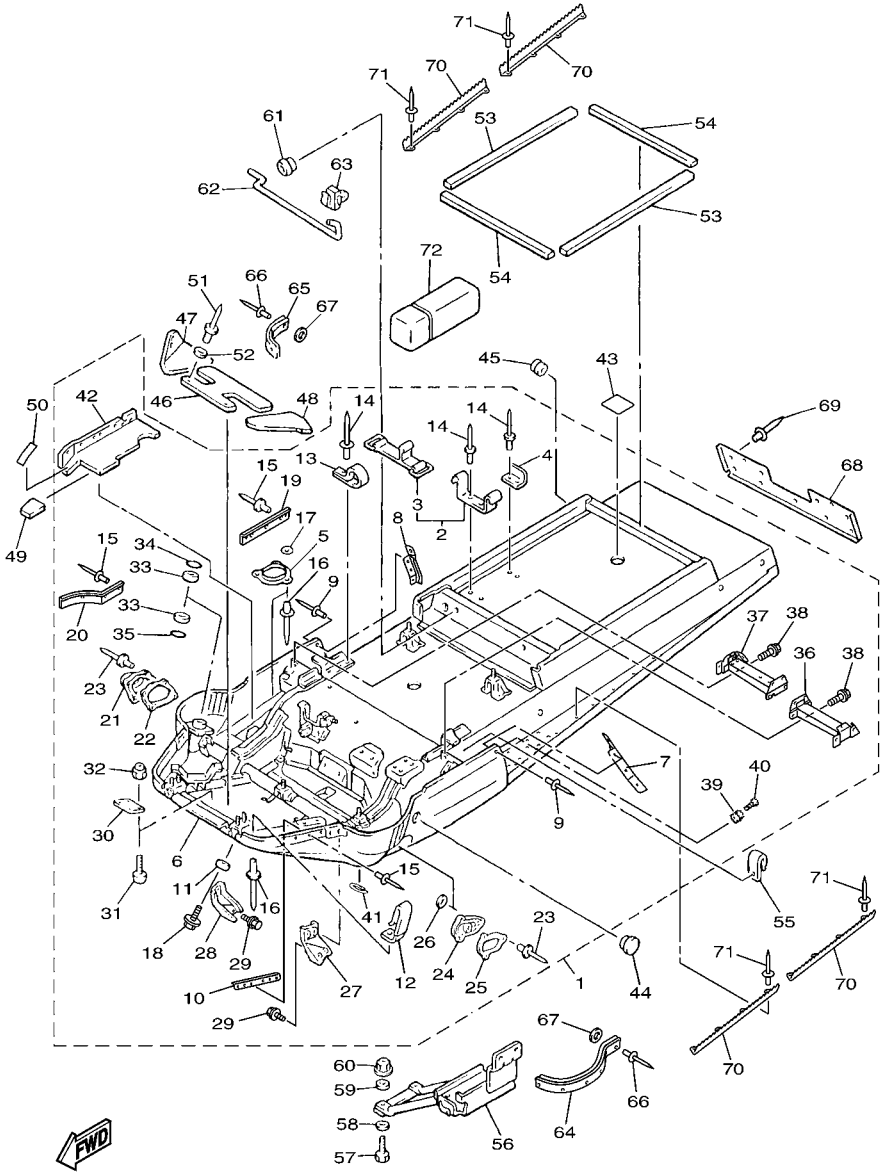

8JD1100-M152

FIG. 15 FRAME

REF. NO.	PART NO.	DESCRIPTION	EUR	RUS	JPN			REMARKS
1	8JD–W2190–01	FRAME COMP.	1	1	1			
2	81E–21945–00	.BRACKET, TOOL BOX FITTING	1	1	1			
3	4J2–82131–01	..BAND, BATTERY	1	1	1			
4	83R–21955–00	.BRACKET, TOOL BOX FITTING	1	1	1			
5	83R–2198F–00	.COVER 1	1	1	1			
6	8JD–21912–01	.PANEL, SUB FRAME 1	1	1	1			
7	83R–21986–00	.REINFORCEMENT, FRAME 1	1	1	1			
8	83R–21987–00	.REINFORCEMENT, FRAME 2	1	1	1			
9	90267–49152	.RIVET, BLIND (4.9X16.1)	6	6	6			
10	8AC–21965–00	.PATCH 5	2	2	2			
11	90387–081R2	.COLLAR	2	2	2			
12	90465–08368	.CLAMP	5	5	5			
13	90462–05059	.CLAMP	1	1	1			
14	90267–48060	.RIVET,BLIND (4.8X12.9 BLACK)	28	28	28			
15	90267–48051	.RIVET, BLIND (4.8X18.7 BLACK)	17	17	17			
16	90267–48018	.RIVET, BLIND (4.8X18.6 BLACK)	42	42	42			
17	90201–04027	.WASHER, PLATE	3	3	3			
18	95827–06016	.BOLT, FLANGE	2	2	2			
19	8AT–77527–02	.PLATE, BACK UP	2	2	2			
20	8JD–77577–00	.PLATE, 1	1	1	1			
21	8AT–23818–00	.COVER, STEERING	1	1	1			
22	8AT–77526–00	.WASHER 2	1	1	1			
23	90267–40029	.RIVET, BLIND (4X18 BLACK)	7	7	7			
24	8M6–2198F–00	.COVER 1	1	1	1			
25	8M6–21998–00	.SPACER	1	1	1			
26	90201–043H5	.WASHER, PLATE	3	3	3			
27	8AT–2194Y–00	.BRACKET, FRONT GUARD 3	1	1	1			

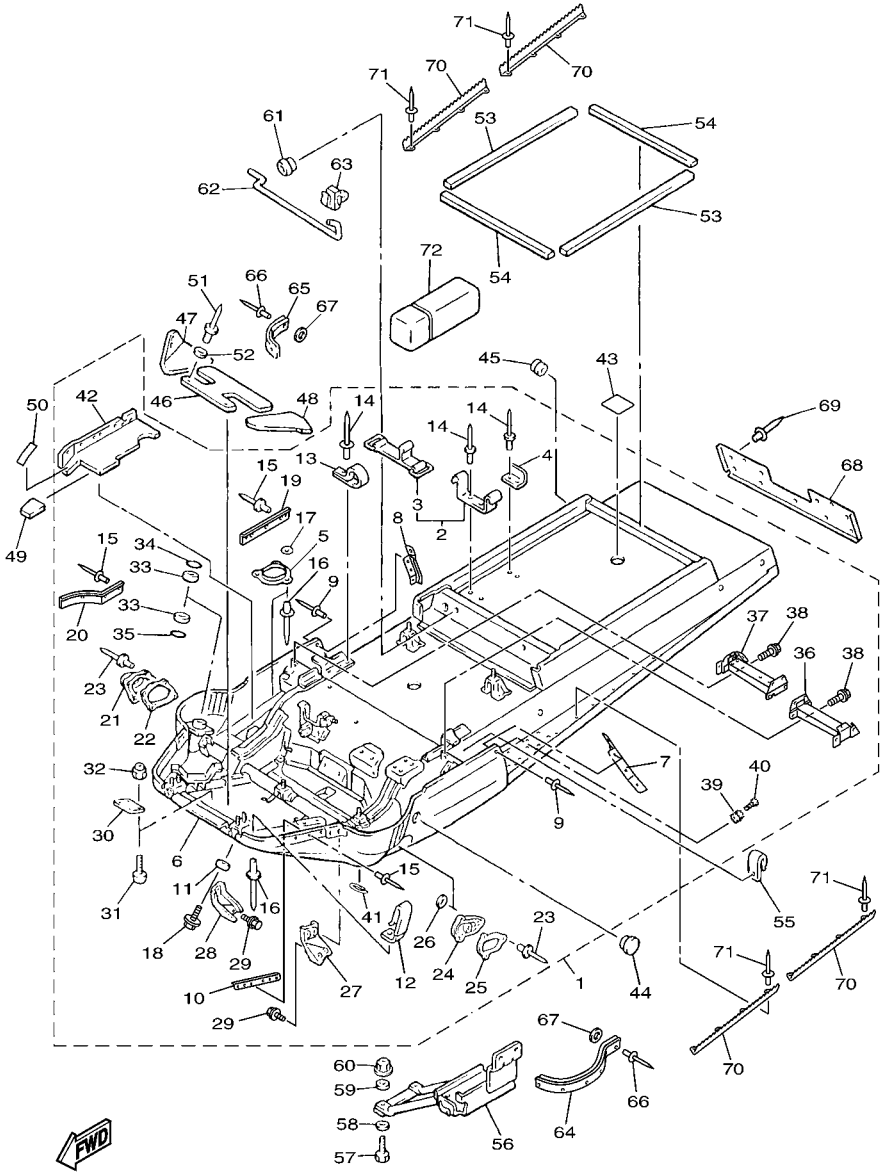

8JD1100-M152

FIG. 15 FRAME

REF. NO.	PART NO.	DESCRIPTION	EUR	RUS	JPN			REMARKS
28	8AT–2195Y–00	.BRACKET, FRONT GUARD 4	1	1	1			
29	90105–08408	.BOLT, FLANGE	4	4	4			
30	89X–21917–00	.PANEL, SUB FRAME 6	2	2	2			
31	98907–05014	.SCREW, BIND	8	8	8			
32	95707–05300	.NUT, FLANGE	8	8	8			
33	90384–36134	.BUSH, BIMETAL FORMED	4	4	4			
34	93102–36232	.OIL SEAL	2	2	2			
35	93103–36117	.OIL SEAL	2	2	2			
36	8AT–23883–01	.BRACKET 3	1	1	1			
37	8AT–23884–01	.BRACKET 4	1	1	1			
38	95802–06012	.BOLT, FLANGE	4	4	4			
39	8M6–77175–00	.HOLDER, LATCH	2	2	2			
40	98907–06035	.SCREW, BIND	2	2	2			
41	93410–52061	.CIRCLIP	2	2	2			
42	8JD–77272–01	.DAMPER, NOISE 12	1	1	1			
43	8CR–2198J–00	COVER 3	1	1	1			
44	90338–44093	PLUG	1	1	1			
45	90480–15061	GROMMET	1	1	1			
46	8AT–77271–00	DAMPER, NOISE 11	1	1	1			
47	8AT–77273–10	DAMPER, NOISE 13	1	1	1			
48	8AT–77274–00	DAMPER, NOISE 14	1	1	1			
49	8AT–77275–00	DAMPER, NOISE 15	1	1	1			
50	8CR–77165–00	TRIM 1	1	1	1			
51	90267–48018	RIVET, BLIND (4.8X18.6 BLACK)	2	2	2			
52	90201–04027	WASHER, PLATE	2	2	2			
53	83R–7717E–00	TAPE 1	2	2	2			
54	83R–7717F–00	TAPE 2	2	2	2			

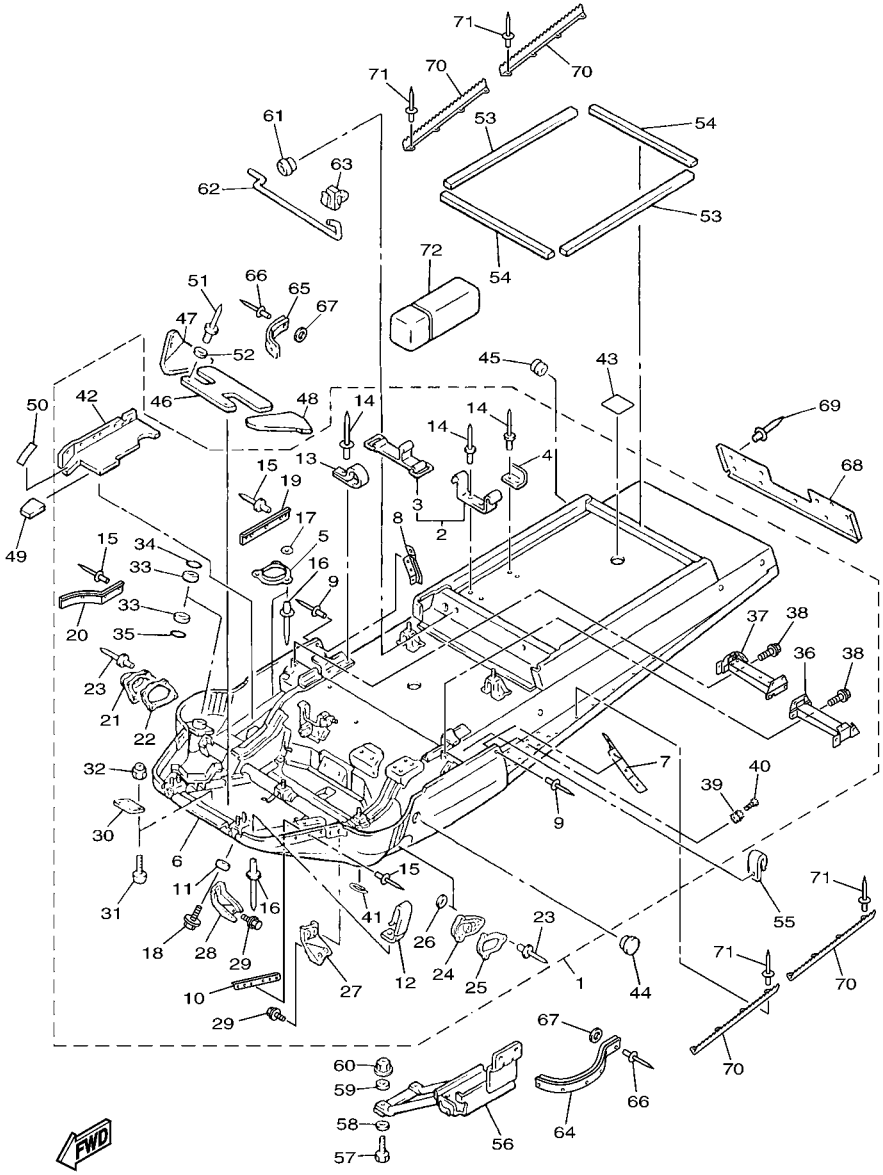

8JD1100-M152

FIG. 15 FRAME

REF. NO.	PART NO.	DESCRIPTION	EUR	RUS	JPN			REMARKS
55	90465–08125	CLAMP	1	1	1			
56	8AT–2199G–01	BRACKET, BATTERY	1	1	1			
57	97022–06025	BOLT, HEXAGON	2	2	2			
58	90201–06778	WASHER, PLATE	2	2	2			
59	90201–063A5	WASHER, PLATE	2	2	2			
60	95702–06300	NUT, NYLON	2	2	2			
61	90480–10348	GROMMET	1	1	1			
62	85R–2471A–00	STAY, SEAT	1	1	1			
63	85R–2639F–00	HOLDER 2	1	1	1			
64	8AT–2196T–00	TRIM 1	1	1	1			
65	8JD–2196T–00	TRIM 1	1	1	1			
66	90267–40172	RIVET, BLIND (4X19)	9	9	9			
67	90201–042E0	WASHER, PLATE	9	9	9			
68	8AC–21933–00	REINFORCEMENT, FRAME REAR 2	1	1	1			
69	90267–47186	RIVET, BLIND (4.7X16.4 BLACK)	6	6	6			
70	8JD–21926–00	REINFORCEMENT, FOOTREST 1	4	4	4			
71	90267–48023	RIVET, BLIND(4.8X12.1 YELLOW)	16	16	16			
72	85L–28100–00	TOOL KIT	1	1	1			

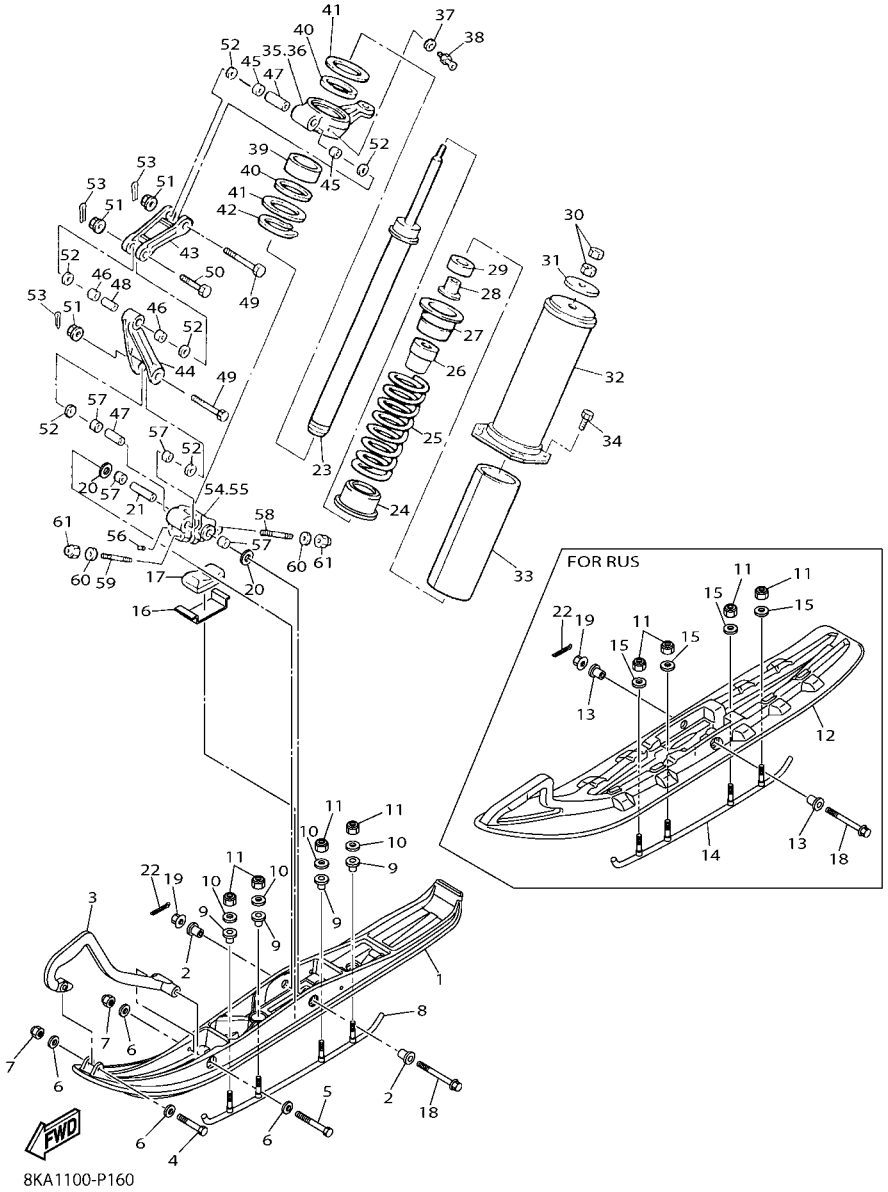

FIG. 16 SKI

REF. NO.	PART NO.	DESCRIPTION	EUR	RUS	JPN			REMARKS
1	8AC–23711–00	SKI 1	2		2			
2	8AC–23754–00	COLLAR 1	4		4			
3	8DM–23712–00	REINFORCEMENT, HEAD	2		2			
4	8HG–23755–00	BOLT, REINFORCEMENT HEAD 1	2		2			
5	8HG–23756–00	BOLT, REINFORCEMENT HEAD 2	2		2			
6	8HG–23737–00	WASHER 1	8		8			
7	8HG–23778–00	NUT	4		4			
8	8EN–23731–01	RUNNER 1	2		2			
9	90387–09018	COLLAR	8		8			
10	90201–08043	WASHER, PLATE	8		8			
11	95702–08300	NUT, NYLON	8	8	8			
12	8JD–23711–00	SKI 1		2				
13	8JD–23754–00	COLLAR 1		4				
14	8JD–23731–00	RUNNER 1		2				
15	90201–08053	WASHER, PLATE		8				
16	8AC–23765–00	STOPPER	2	2	2			
17	88T–23743–00	STOPPER 1	2	2	2			
18	90105–10410	BOLT, FLANGE	2	2	2			
19	95602–10200	NUT, U FLANGE	2	2	2			
20	90201–100S7	WASHER, PLATE	4	4	4			
21	90387–106J3	COLLAR	2	2	2			
22	91401–20020	PIN, COTTER	2	2	2			
23	8KA–22401–00	DAMPER SUB ASSY	2	2	2			
24	8KA–23777–00	SEAT, SPRING 2	2	2	2			
25	90501–75612	SPRING, COMPRESSION	2	2	2			
26	89L–22493–00	BUMP, STOP	2	2	2			
27	8L0–23788–00	PLATE, BACK UP	2	2	2			

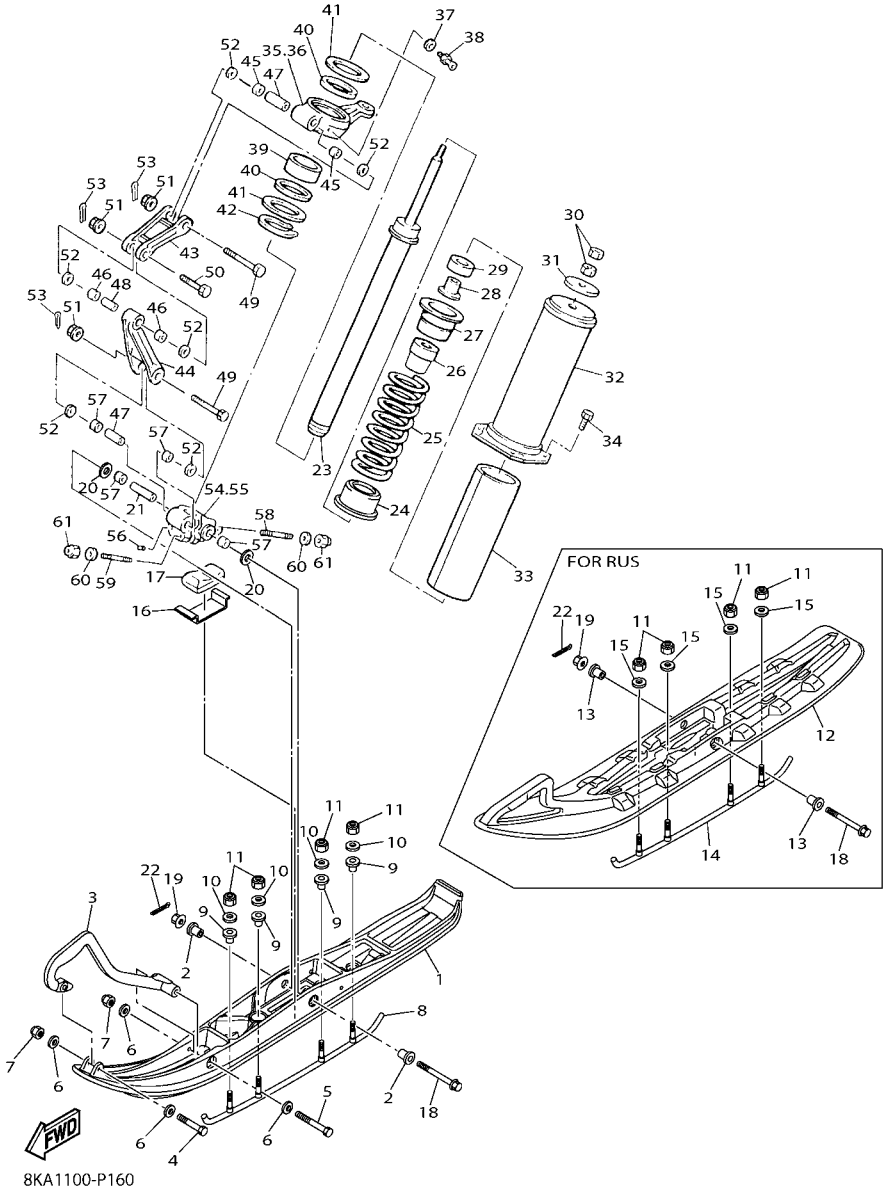

FIG. 16 SKI

REF. NO.	PART NO.	DESCRIPTION	EUR	RUS	JPN			REMARKS
28	90387–084R1	COLLAR	2	2	2			
29	82M–23779–00	WASHER	2	2	2			
30	95302–08600	NUT	4	4	4			
31	90201–080L1	WASHER, PLATE	2	2	2			
32	8AT–2376J–00	HOLDER, ABSORBER	2	2	2			
33	8L0–2376R–00	PROTECTOR	2	2	2			
34	97022–06020	BOLT, HEXAGON	8	8	8			
35	82M–23851–00	ARM, OUTSIDE 1 (L,H)	1	1	1			
36	8AT–23852–00	ARM, OUTSIDE 2 (R,H)	1	1	1			
37	90201–067F9	WASHER, PLATE	2	2	2			
38	93700–06004	NIPPLE, GREASE	2	2	2			
39	90384–53175	BUSH, BIMETAL FORMED	2	2	2			
40	93109–53036	OIL SEAL	4	4	4			
41	90201–536A1	WASHER, PLATE (T=1.0)	4	4	4			UR UN
	90201–535H6	WASHER, PLATE (T=2.0)	4	4	4			UR UN
42	93410–52061	CIRCLIP	2	2	2			
43	8L0–2382E–01	ARM, FRONT 1	2	2	2			
44	8L0–2382F–00	ARM, FRONT 2	2	2	2			
45	90384–14091	BUSH, BIMETAL FORMED	4	4	4			
46	90384–14096	BUSH, BIMETAL FORMED	4	4	4			
47	90387–101Y9	COLLAR	4	4	4			
48	90387–100A4	COLLAR	2	2	2			
49	90102–10039	BOLT, WITH HOLE	4	4	4			
50	90102–10067	BOLT, WITH HOLE	2	2	2			
51	95707–10300	NUT, FLANGE	6	6	6			
52	90202–14037	WASHER, PLATE	12	12	12			
53	91401–20020	PIN, COTTER	6	6	6			

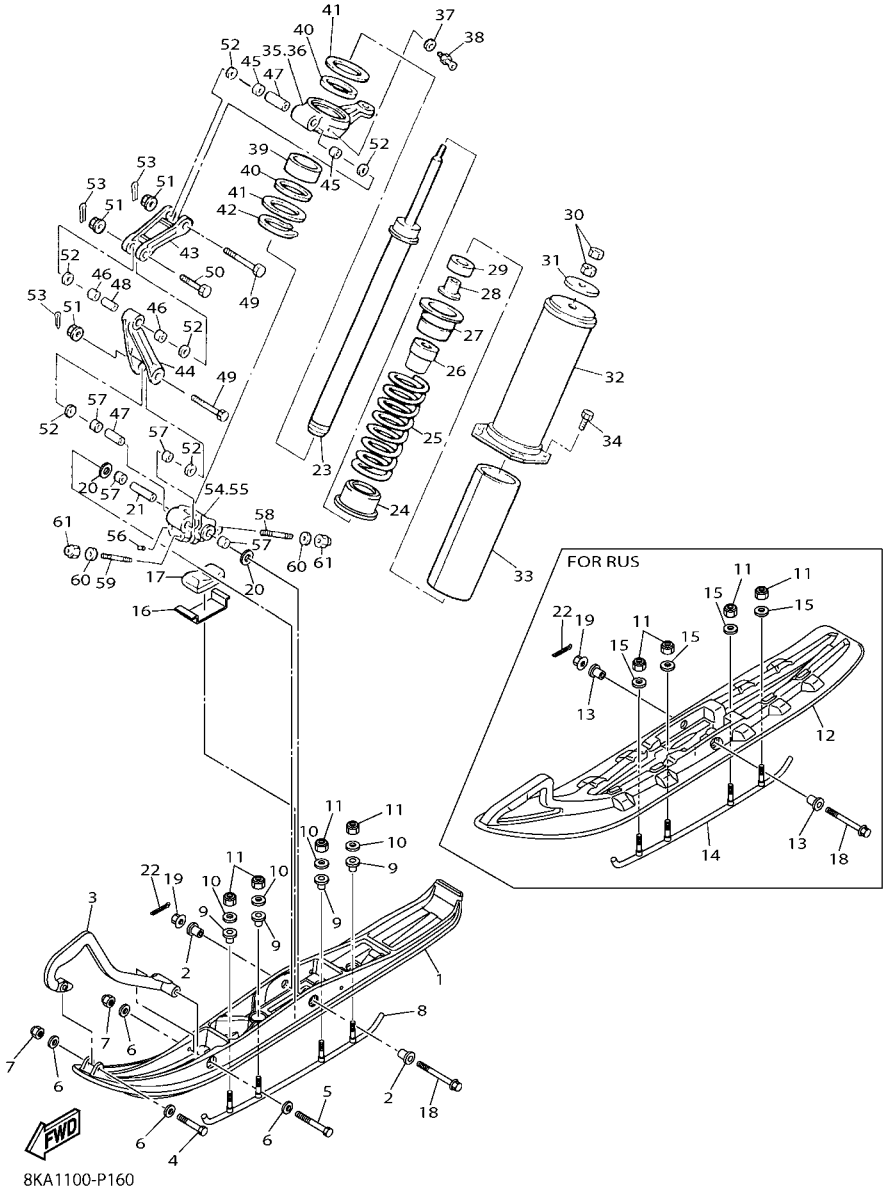

FIG. 16 SKI

REF. NO.	PART NO.	DESCRIPTION	EUR	RUS	JPN			REMARKS
54	84M–2376E–00	BRACKET 1	1	1	1			(L,H)
55	84M–2377E–00	BRACKET 2	1	1	1			(R,H)
56	90113–06039	BOLT, SET	2	2	2			
57	90384–14091	BUSH, BIMETAL FORMED	8	8	8			
58	95617–08655	BOLT, STUD	2	2	2			
59	95617–08640	BOLT, STUD	2	2	2			
60	92902–08600	WASHER, PLATE	4	4	4			
61	95702–08300	NUT, NYLON	4	4	4			

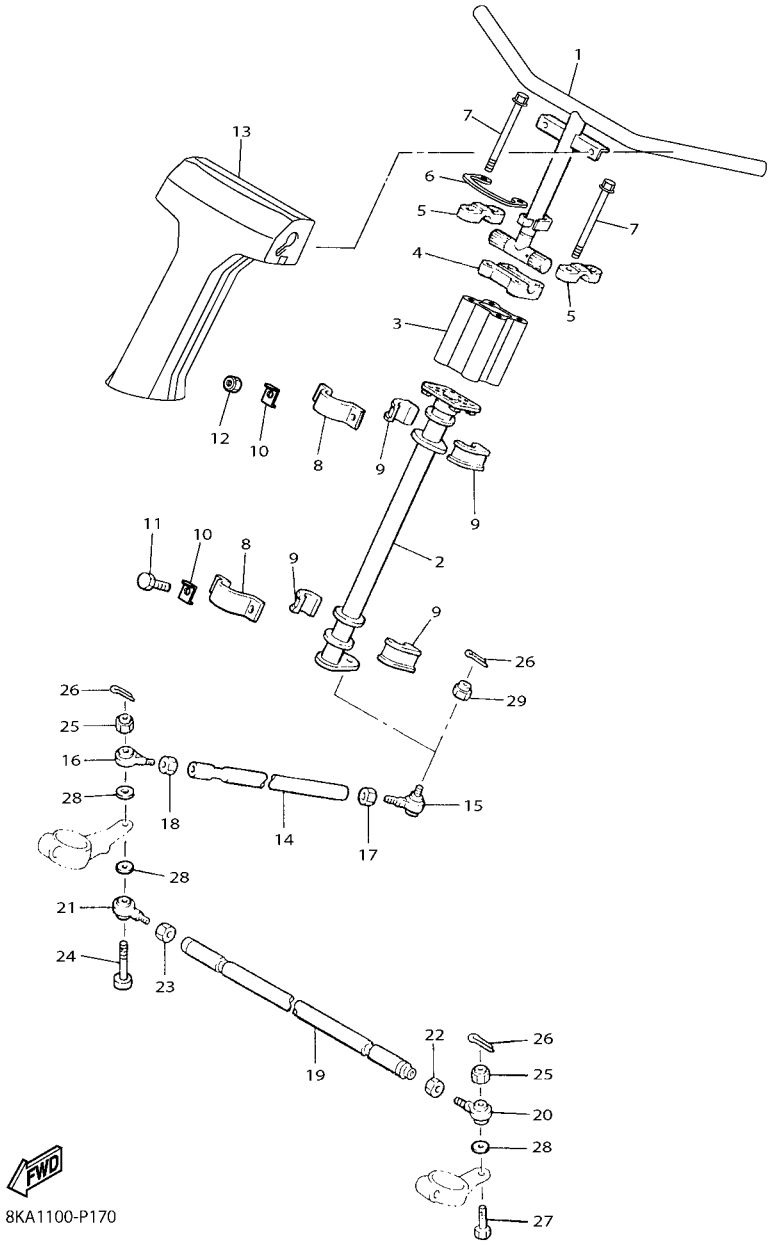

FIG. 17 STEERING

REF. NO.	PART NO.	DESCRIPTION	EUR	RUS	JPN			REMARKS
1	8AU–23811–11	COLUMN, STEERING	1	1	1			
2	8KA–23813–00	COLUMN, STEERING 2	1	1	1			
3	8KA–2381B–00	JOINT	1	1	1			
4	8G5–23814–01	HOLDER, HANDLE UPPER	1	1	1			
5	8K1–23814–00	HOLDER, HANDLE	2	2	2			
6	8JN–23857–00	HOLDER	1	1	1			
7	90105–08364	BOLT, FLANGE	4	4	4			
8	84M–23868–00	BRACKET, STEERING LOWER	2	2	2			
9	8F3–23812–00	BEARING, STEERING	4	4	4			
10	8AC–23894–01	WASHER, LOCK 1	4	4	4			
11	90101–08005	BOLT	2	2	2			
12	90185–08054	NUT, SELF-LOCKING	2	2	2			
13	8KA–23815–00	PAD, STEERING	1	1	1			
14	8AT–23821–00	ROD, STEERING RELAY	1	1	1			
15	86X–23841–00	JOINT, UNIVERSAL 1	1	1	1			
16	87S–23847–01	JOINT, UNIVERSAL 3	1	1	1			(L.H. THREAD)
17	95307–10700	NUT	1	1	1			
18	90170–10186	NUT	1	1	1			(L.H. THREAD)
19	8AT–23831–00	ROD, TIE	1	1	1			
20	87S–23845–01	JOINT, UNIVERSAL 2	1	1	1			
21	87S–23847–01	JOINT, UNIVERSAL 3	1	1	1			(L.H. THREAD)
22	95307–10700	NUT	1	1	1			
23	90170–10186	NUT	1	1	1			(L.H. THREAD)
24	90102–10067	BOLT, WITH HOLE	1	1	1			
25	95707–10300	NUT, FLANGE	2	2	2			
26	91401–25020	PIN, COTTER	3	3	3			
27	90102–10044	BOLT, WITH HOLE	1	1	1			

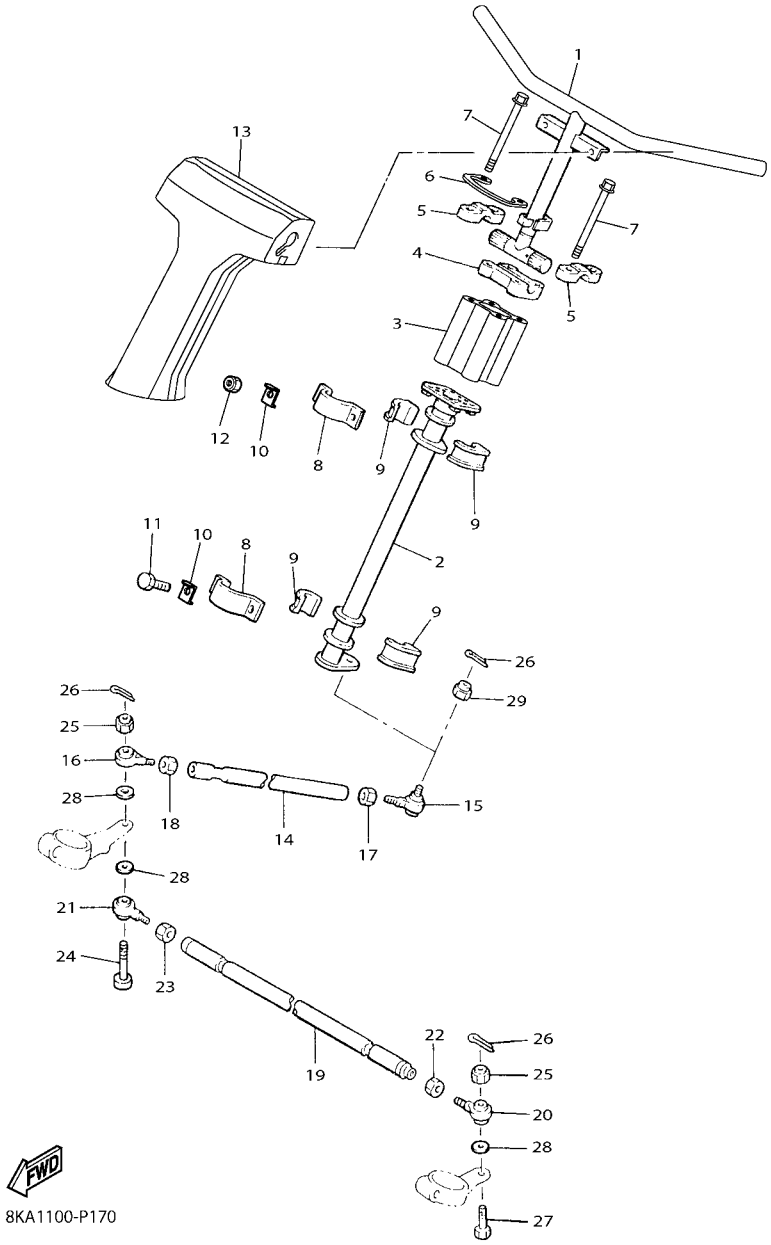

FIG. 17 STEERING

REF. NO.	PART NO.	DESCRIPTION	EUR	RUS	JPN			REMARKS
28	90201–08759	WASHER, PLATE	3	3	3			
29	90185–10085	NUT, SELF-LOCKING	1	1	1			

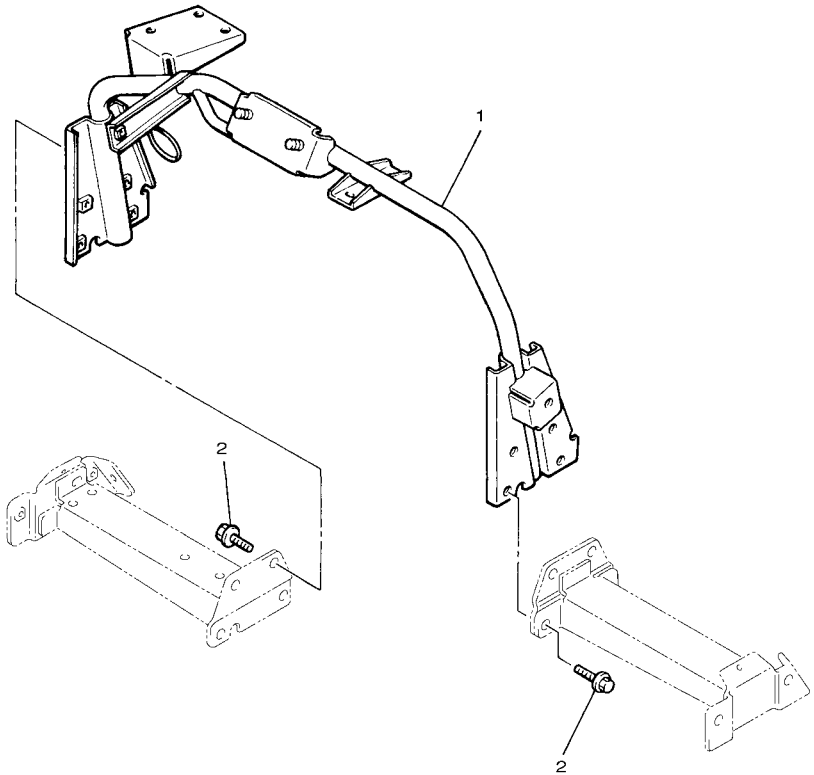

8JD1100-M180

FIG. 18 STEERING GATE

REF. NO.	PART NO.	DESCRIPTION	EUR	RUS	JPN			REMARKS
1	83R–23870–00	STEERING GATE COMP.	1	1	1			
2	95802–08016	BOLT, FLANGE	8	8	8			

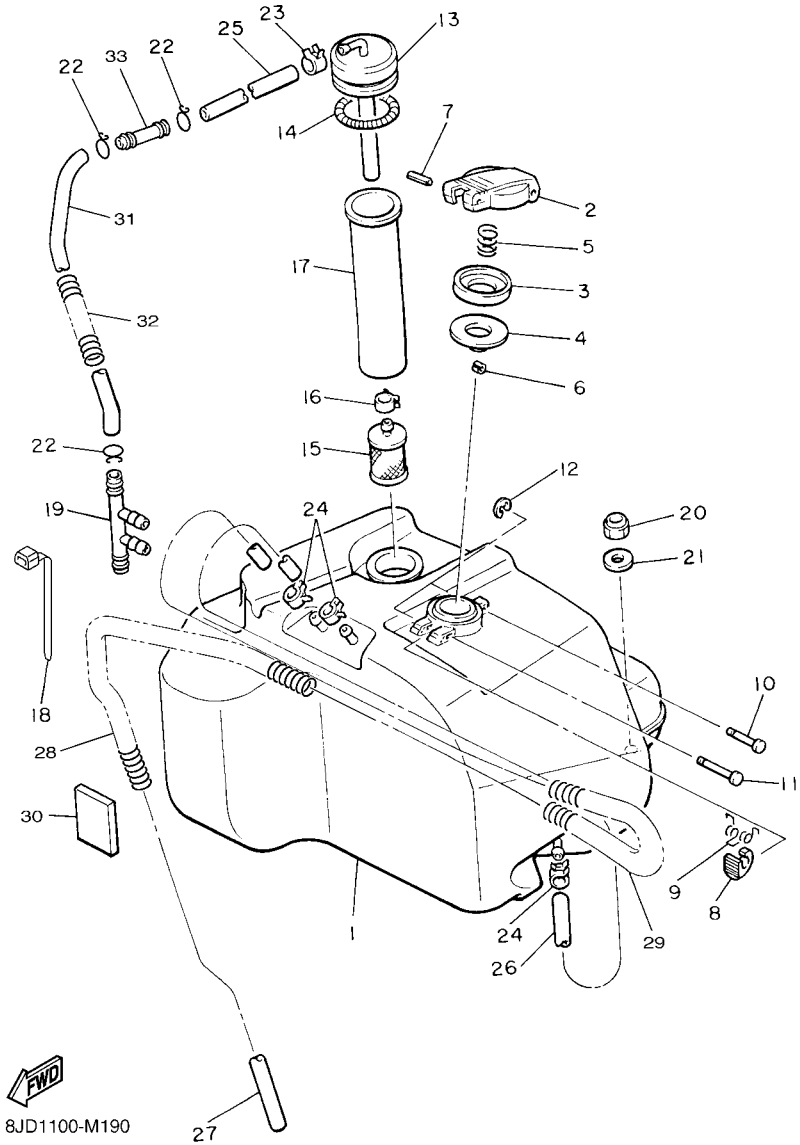

FIG. 19 FUEL TANK

REF. NO.	PART NO.	DESCRIPTION	EUR	RUS	JPN			REMARKS
1	83R–24111–00	TANK, FUEL	1	1	1			
2	8W6–24611–00	BODY, CAP	1	1	1			
3	813–24613–01	DISC, CAP	1	1	1			
4	8F7–24641–00	GASKET, CAP 1	1	1	1			
5	90501–20130	SPRING, COMPRESSION	1	1	1			
6	91609–30016	PIN, SPRING	1	1	1			
7	91609–25050	PIN, SPRING	1	1	1			
8	83M–24628–00	HOOK	1	1	1			
9	90508–10715	SPRING, TORSION	1	1	1			
10	90249–03175	PIN	1	1	1			
11	90249–03017	PIN	1	1	1			
12	93430–02001	CIRCLIP	2	2	2			
13	83R–24335–00	PIPE, SUCTION 1	1	1	1			
14	90506–06065	SPRING, TENSION	1	1	1			
15	8H5–24560–00	FILTER ASSY	1	1	1			
16	90467–11032	CLIP	1	1	1			
17	813–24336–00	PIPE, SUCTION 2	1	1	1			
18	90464–15195	CLAMP	5	5	5			
19	82M–24376–00	PIPE, JOINT 1	1	1	1			
20	95702–08300	NUT, NYLON	2	2	2			
21	90201–08784	WASHER, PLATE	2	2	2			
22	90467–11009	CLIP	3	3	3			
23	90467–11032	CLIP	1	1	1			
24	90467–09026	CLIP	3	3	3			
25	90445–115K6	HOSE (L390)	1	1	1			
26	90445–095F1	HOSE (L650)	1	1				
	91A20–05065	TUBE, FLEXIBLE VINYL			1			

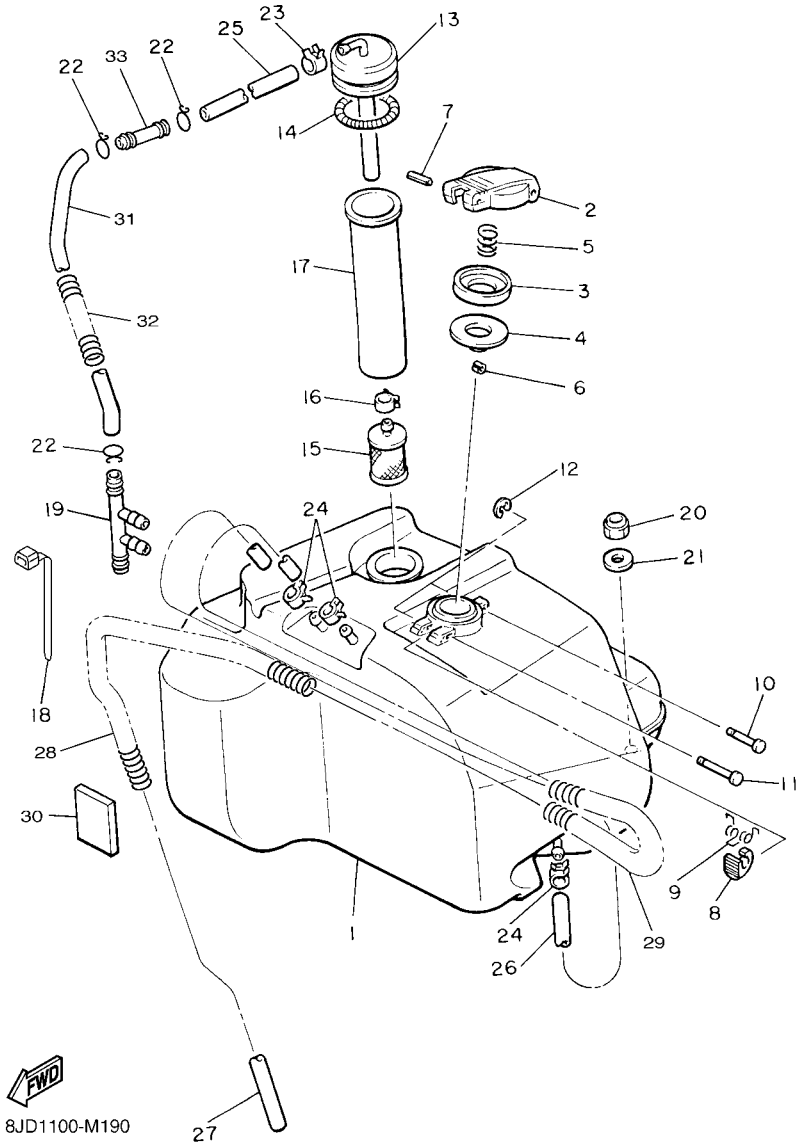

FIG. 19 FUEL TANK

REF. NO.	PART NO.	DESCRIPTION	EUR	RUS	JPN			REMARKS
27	91A21–05155	TUBE, FLEXIBLE	1	1	1			
28	90501–083J9	SPRING, COMPRESSION	1	1	1			
29	81E–24328–00	PROTECTOR, PIPE	1	1	1			
30	8V0–23858–00	SPACER	1	1	1			
31	90445–114J9	HOSE (L265)	1	1	1			
32	84M–24327–00	PROTECTOR, PIPE	1	1	1			
33	878–24379–00	PIPE, JOINT 4	1	1	1			

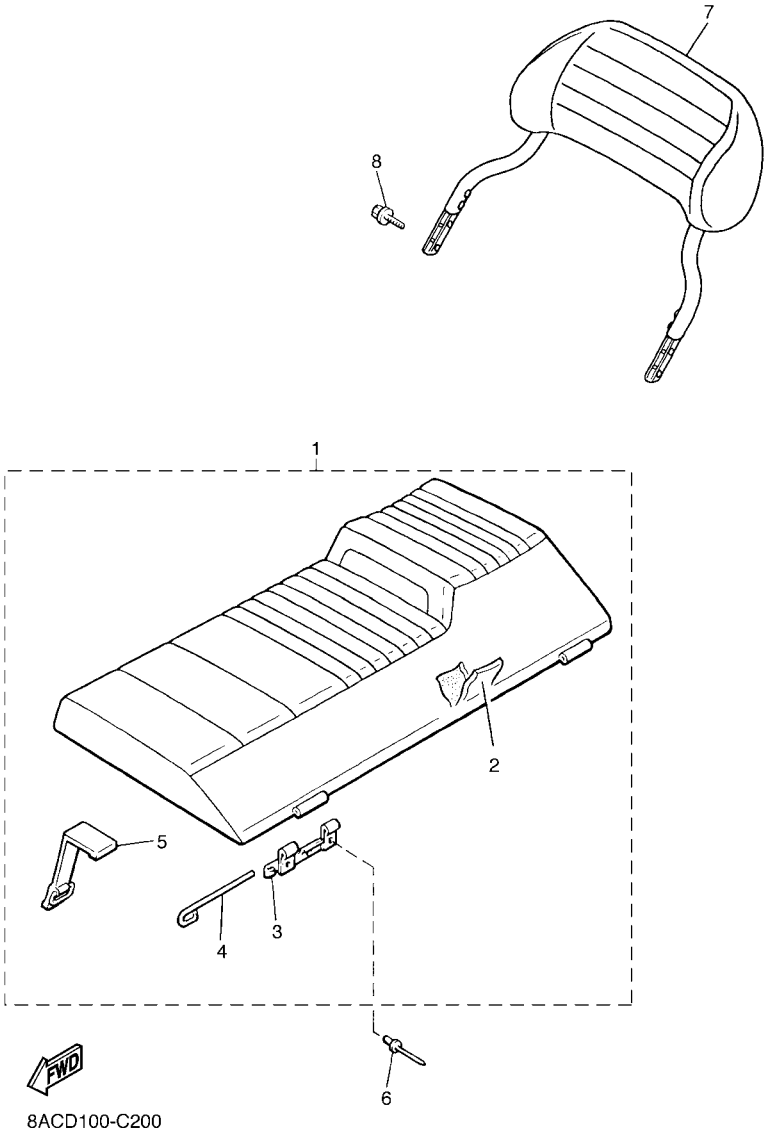

FIG. 20 SEAT

REF. NO.	PART NO.	DESCRIPTION	EUR	RUS	JPN			REMARKS
1	8AC–24730–01	DOUBLE SEAT ASSY	1	1	1			
2	8AC–2470F–00	.SEAT COVER COMP.	1	1	1			
3	83R–24729–00	.SPACER 2	2	2	2			
4	86V–77384–00	.PIN	2	2	2			
5	8AT–24778–00	.BAND, SEAT FITTING	2	2	2			
6	90267–48060	RIVET,BLIND (4.8X12.9 BLACK)	6	6	6			
7	8AC–24790–10	SEAT BACK ASSY	1	1	1			
8	90105–06437	BOLT, FLANGE	4	4	4			

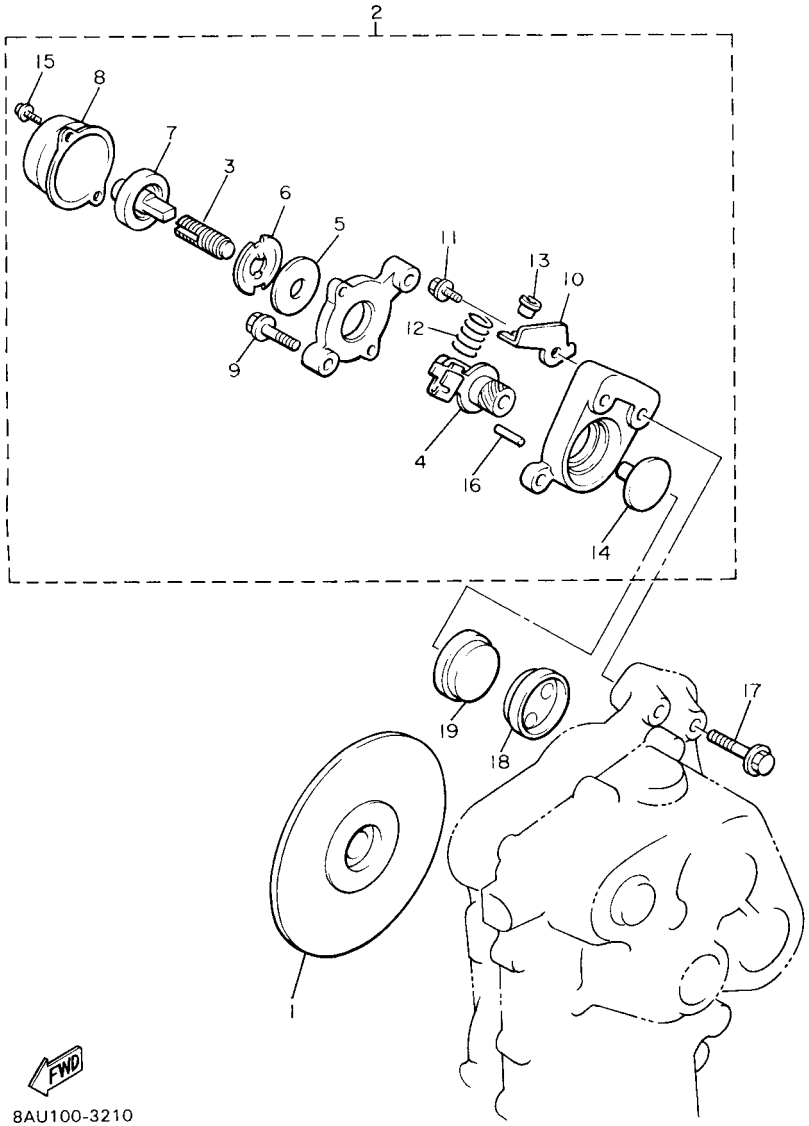

FIG. 21 BRAKE

REF. NO.	PART NO.	DESCRIPTION	EUR	RUS	JPN			REMARKS
1	83R–25831–00	DISC, BRAKE (RIGHT)	1	1	1			
2	87R–25730–01	CALIPER BODY COMP.1	1	1	1			
3	86M–25738–00	.SCREW, ADJUSTING 1	1	1	1			
4	87R–25726–01	.LEVER, BRAKE	1	1	1			
5	86M–25827–00	.SHIM, CALIPER	1	1	1			
6	86M–25773–00	.LOCK, ONE WAY 2	1	1	1			
7	86M–25771–00	.RATCHET, ADJUSTING	1	1	1			
8	86M–25772–00	.COVER	1	1	1			
9	86M–25818–00	.BOLT, CALIPER	2	2	2			
10	87R–25721–00	.BRACKET, CALIPER	1	1	1			
11	86M–25826–00	.BOLT 3	1	1	1			
12	87R–25743–00	.SPRING	1	1	1			
13	87R–25722–00	.BRACKET, ADJUSTING	1	1	1			
14	86M–25733–00	.PLATE, BACK UP	1	1	1			
15	86M–25833–00	.BOLT, FITTING	2	2	2			
16	86M–25744–00	.PIN 2	1	1	1			
17	95827–10050	BOLT, FLANGE	2	2	2			
18	89J–25811–00	PAD, CALIPER 2	1	1	1			
19	89J–25911–00	PAD, CALIPER 2	1	1	1			

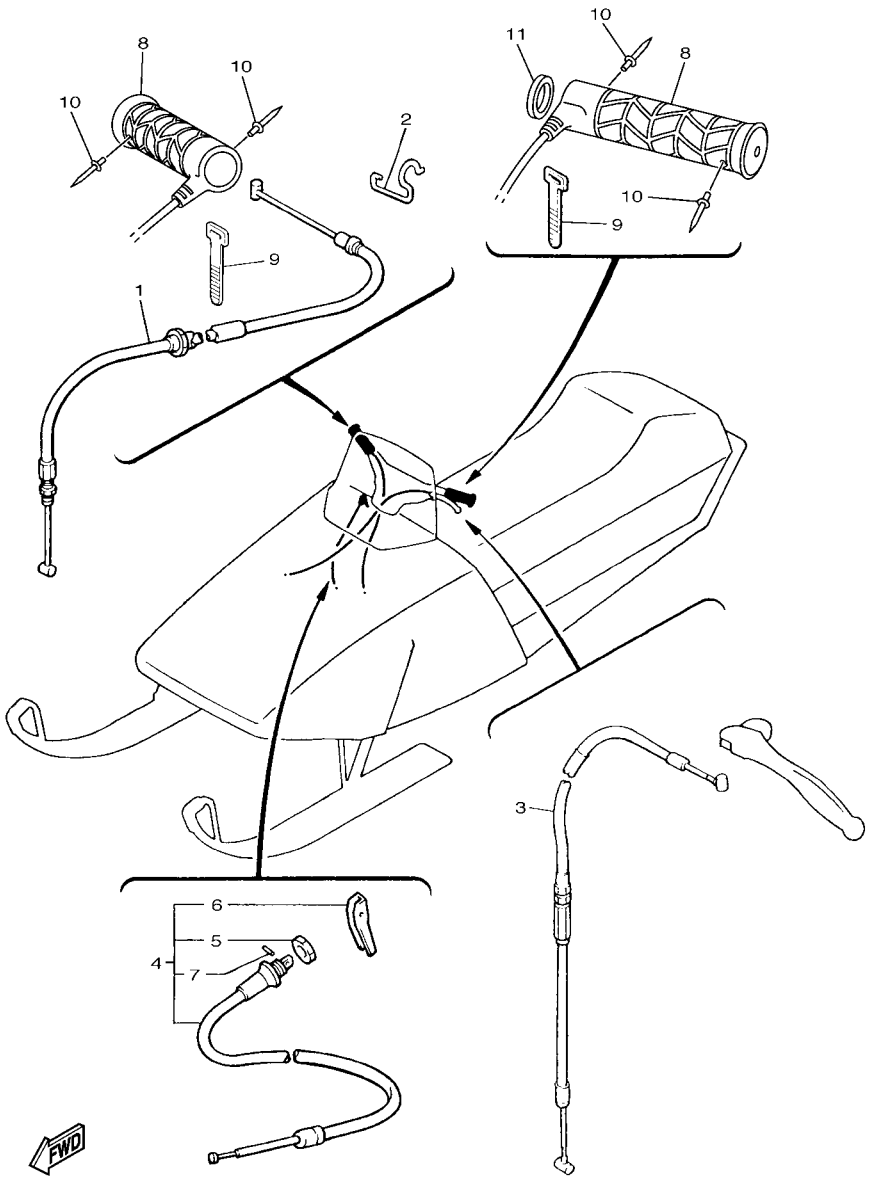

8JD2100-N220

FIG. 22 CONTROL CABLE

REF. NO.	PART NO.	DESCRIPTION	EUR	RUS	JPN			REMARKS
1	8KA–26311–00	CABLE, THROTTLE 1	1	1	1			
2	90465–10189	CLAMP	1	1	1			
3	8KA–26340–00	CABLE, BRAKE	1	1	1			
4	83R–26331–01	CABLE, STARTER 1	1	1	1			
5	8G8–26333–00	.NUT	1	1	1			
6	8U9–26325–00	.KNOB, STARTER	1	1	1			
7	91609–30010	.PIN, SPRING	1	1	1			
8	8DX–26240–01	GRIP ASSY	2	2	2			
9	437–83936–01	BAND, SWITCH CORD	2	2	2			
10	90267–48014	RIVET, BLIND (4.8X15.1 BLACK)	4	4	4			
11	90387–220X0	COLLAR	1	1	1			

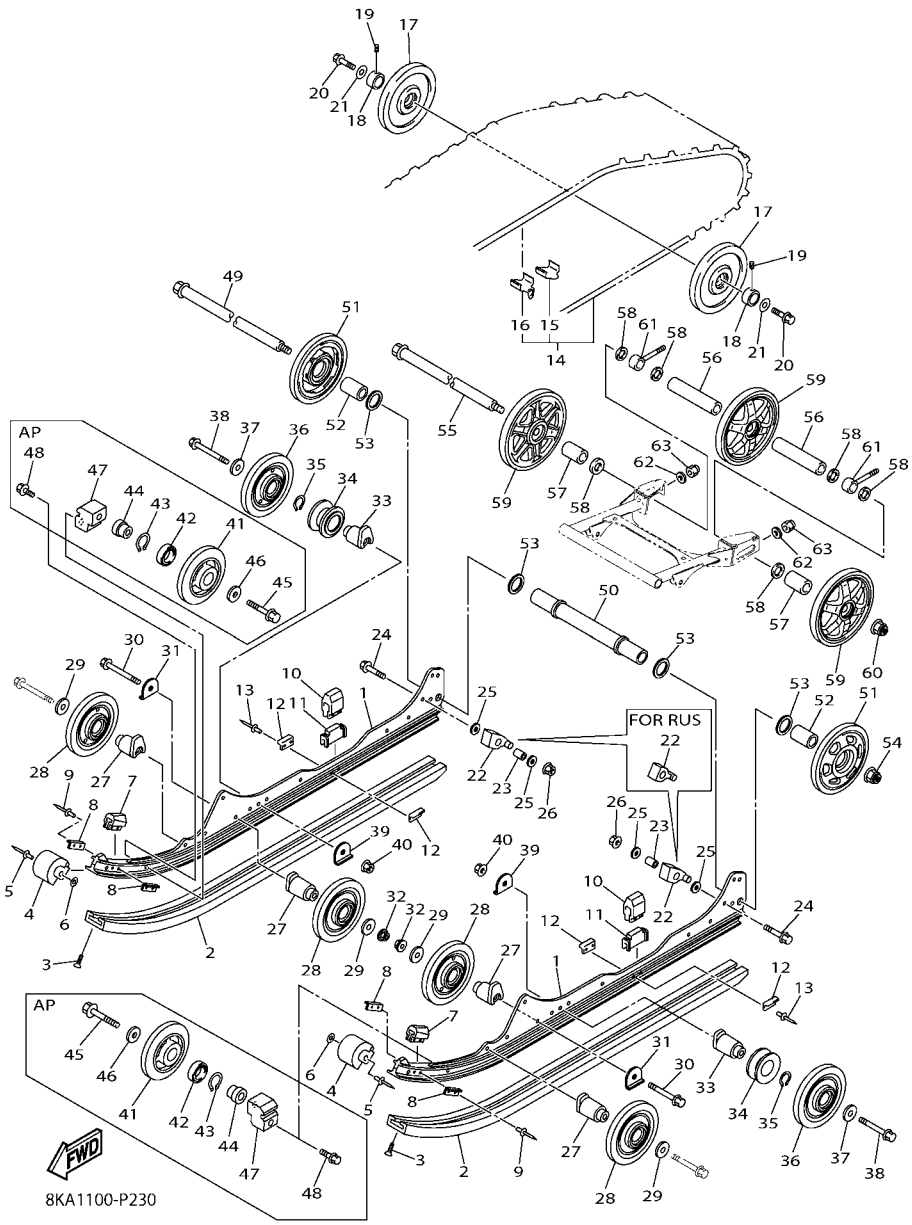

FIG. 23 TRACK SUSPENSION 1

REF. NO.	PART NO.	DESCRIPTION	EUR	RUS	JPN			REMARKS
1	8KA–4741A–00	FRAME, SLIDING	2	2	2			
2	8JD–47421–01	RUNNER, SLIDING 1	2	2	2			
3	90151–06010	SCREW, COUNTERSUNK	2	2	2			
4	8GL–47422–00	RUNNER, SLIDING 2	2	2	2			
5	90267–48194	RIVET, BLIND (4.8X28 SILVER)	4	4	4			
6	90201–047R8	WASHER, PLATE	4	4	4			
7	8ES–47456–00	DAMPER 1	2	2	2			
8	8K2–47458–01	PLATE, DAMPER	4	4	4			
9	90267–48199	RIVET, BLIND (4.8X28.3)	4	4	4			
10	8AC–47457–00	DAMPER 2	2	2	2			
11	8KA–47573–00	SPACER	2	2	2			
12	8AX–47458–00	PLATE, DAMPER	4	4	4			
13	90267–48199	RIVET, BLIND (4.8X28.3)	4	4	4			
14	8JD–47110–01	TRACK ASSY	1	1	1			
15	8HR–47113–09	.PLATE, REINFORCEMENT	72	72	72			
16	8HR–47115–09	.METAL, SLIDE	36	36	36			
17	8AC–47550–00	GUIDE WHEEL ASSY	2	2	2			
18	8JD–47365–00	COLLAR 1	2	2	2			
19	90113–06039	BOLT, SET	2	2	2			
20	90109–10030	BOLT	2	2	2			
21	90201–10072	WASHER, PLATE	2	2	2			
22	8KE–47496–00	STOPPER 2	2		2			
	8JH–47496–00	STOPPER 2		2				
23	90387–105G5	COLLAR	2	2	2			
24	90105–10339	BOLT, FLANGE	2	2	2			
25	90201–10051	WASHER, PLATE	4	4	4			
26	95602–10200	NUT, U FLANGE	2	2	2			

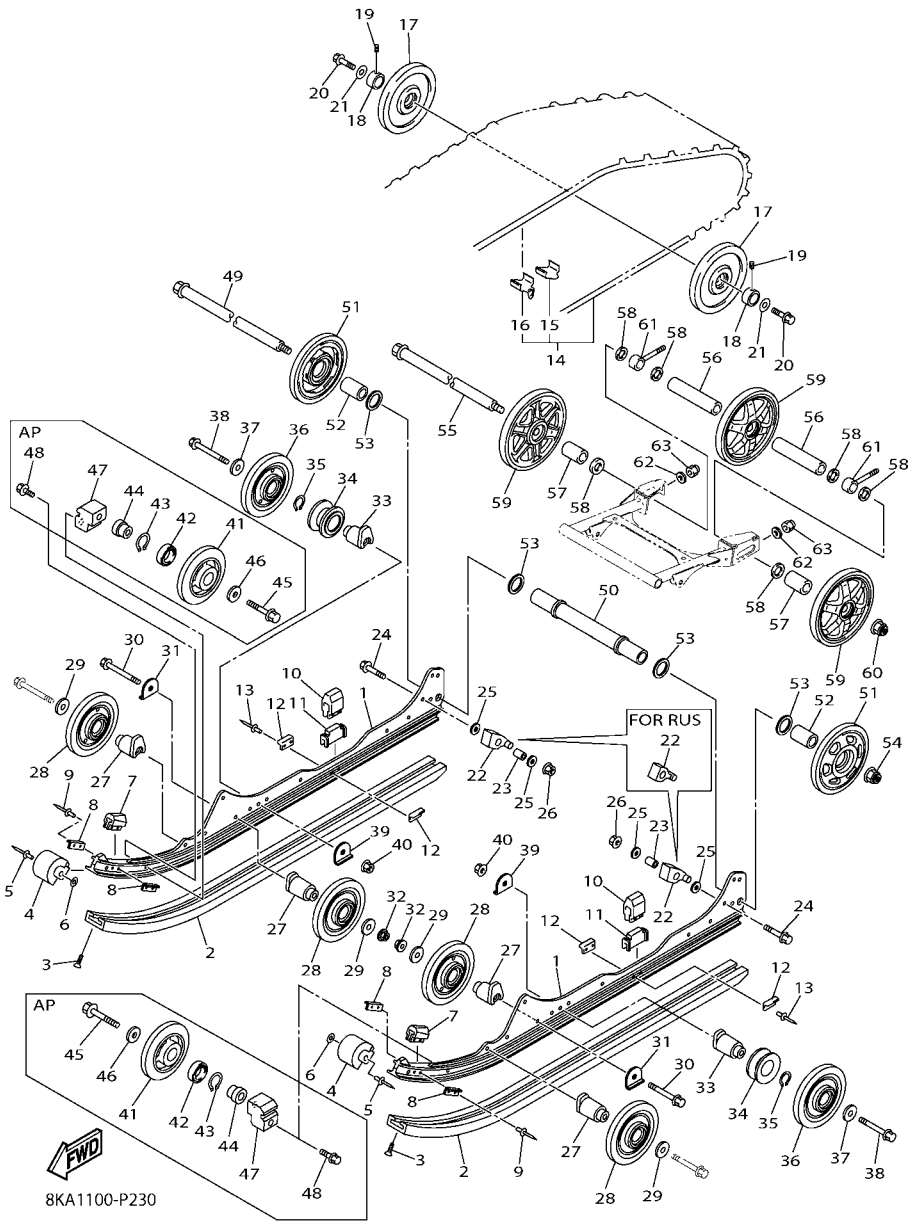

FIG. 23 TRACK SUSPENSION 1

REF. NO.	PART NO.	DESCRIPTION	EUR	RUS	JPN			REMARKS
27	8ES–47419–20	BRACKET 7	4	4	4			
28	8KA–47310–00	SUSPENSION WHEEL ASSY	4	4	4			
29	90201–101U2	WASHER, PLATE	4	4	4			
30	95812–10080	BOLT, FLANGE	2	2	2			
31	90214–10004	WASHER, CLAW	2	2	2			
32	95602–10200	NUT, U FLANGE	2	2	2			
33	8ES–47419–10	BRACKET 7	2	2	2			
34	8ET–47446–00	HOOK 1	2	2	2			
35	99009–35400	CIRCLIP	2	2	2			
36	8KA–47310–00	SUSPENSION WHEEL ASSY	2	2	2			
37	90201–101U2	WASHER, PLATE	2	2	2			
38	95812–10080	BOLT, FLANGE	2	2	2			
39	90214–10003	WASHER, CLAW	2	2	2			
40	95602–10200	NUT, U FLANGE	2	2	2			
41	8AC–47320–00	SUSPENSION WHEEL COMP.	2	2	2			AP
42	93306–00444	BEARING	2	2	2			AP
43	99009–42500	CIRCLIP	2	2	2			AP
44	8GP–47319–00	COLLAR	2	2	2			AP
45	95812–10045	BOLT, FLANGE	2	2	2			AP
46	90201–10052	WASHER, PLATE	2	2	2			AP
47	8GP–47419–00	BRACKET 7	2	2	2			AP
48	90105–10237	BOLT, FLANGE	2	2	2			AP
49	8JN–47520–00	REAR AXLE COMP.	1	1	1			
50	83R–47469–10	COLLAR 1	1	1	1			
51	8HP–47310–10	SUSPENSION WHEEL ASSY	2	2	2			
52	90387–20022	COLLAR	2	2	2			
53	90201–20022	WASHER, PLATE	4	4	4			

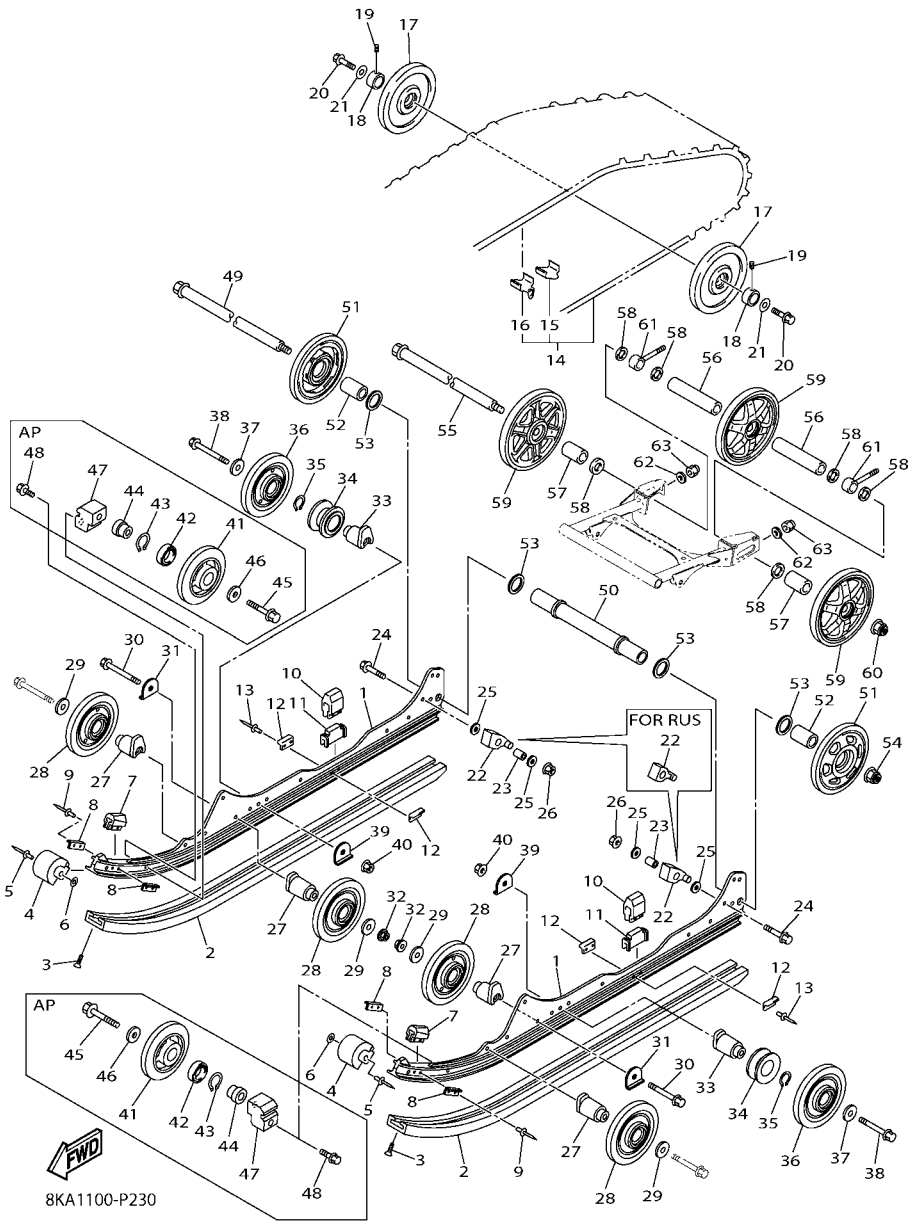

FIG. 23 TRACK SUSPENSION 1

REF. NO.	PART NO.	DESCRIPTION	EUR	RUS	JPN			REMARKS
54	95602–14200	NUT, SELF-LOCKING	1	1	1			
55	8JN–47520–00	REAR AXLE COMP.	1	1	1			
56	90387–20023	COLLAR	2	2	2			
57	90387–20022	COLLAR	2	2	2			
58	90201–20022	WASHER, PLATE	6	6	6			
59	8KA–47550–00	GUIDE WHEEL ASSY	3	3	3			
60	95602–14200	NUT, SELF-LOCKING	1	1	1			
61	8DM–47479–00	COLLAR 3	2	2	2			
62	92902–10600	WASHER, PLATE	2	2	2			
63	95702–10300	NUT, NYLON	2	2	2			

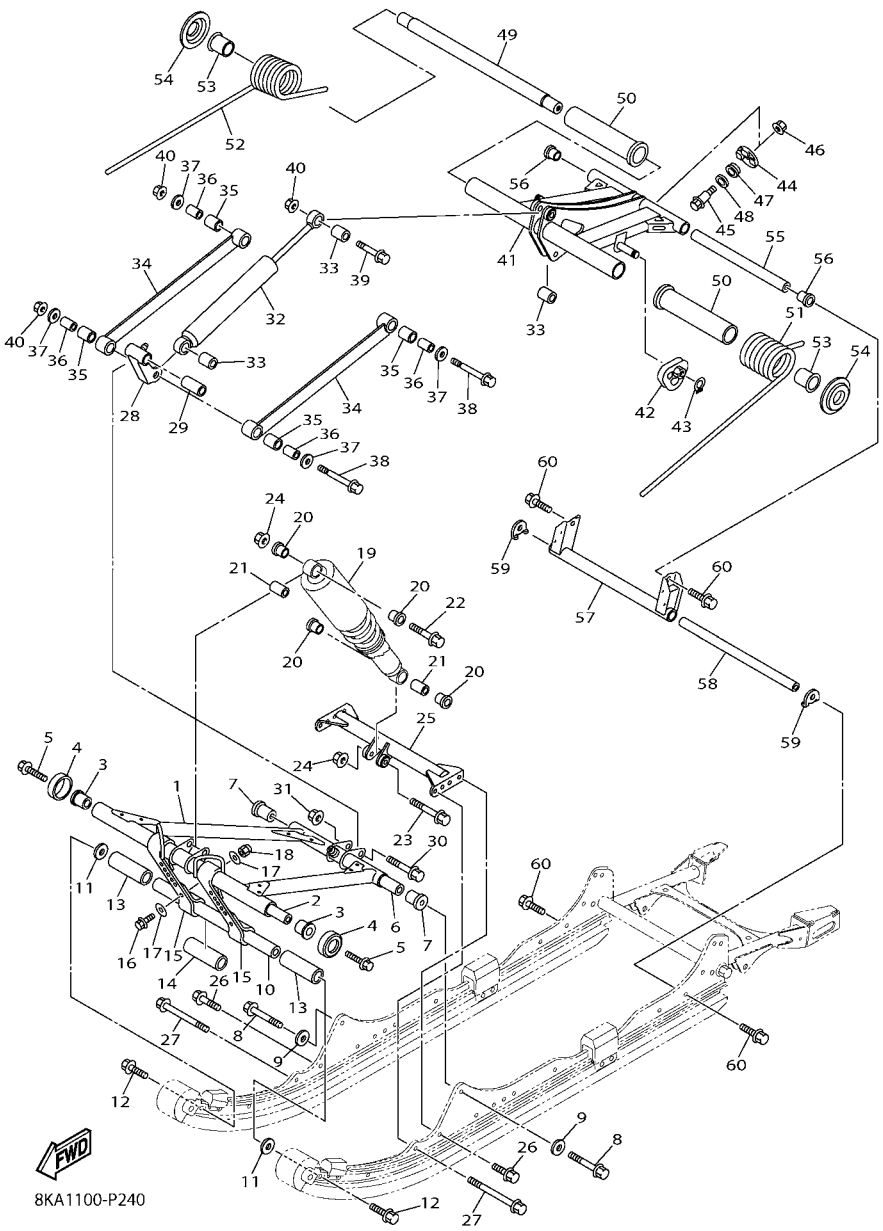

FIG. 24 TRACK SUSPENSION 2

REF. NO.	PART NO.	DESCRIPTION	EUR	RUS	JPN			REMARKS
1	8KA–47331–00	ARM, PIVOT 1	1	1	1			
2	8KA–47465–00	SHAFT 1	1	1	1			
3	90383–22001	BUSH, FORMED	2	2	2			
4	8KA–47341–00	SPACER	2	2	2			
5	90109–10030	BOLT	2	2	2			
6	8JD–47486–00	SHAFT 4	1	1	1			
7	90387–10022	COLLAR	2	2	2			
8	90105–10329	BOLT, FLANGE	2	2	2			
9	90201–10072	WASHER, PLATE	2	2	2			
10	83R–47485–02	SHAFT 3	1	1	1			
11	90201–10126	WASHER, PLATE	2	2	2			
12	90105–10237	BOLT, FLANGE	2	2	2			
13	90387–19002	COLLAR	2	2	2			
14	90387–19007	COLLAR	1	1	1			
15	8HR–47495–00	STOPPER 1	2	2	2			
16	97002–06025	BOLT	4	4	4			
17	90201–06081	WASHER, PLATE	8	8	8			
18	95702–06300	NUT, NYLON	4	4	4			
19	8KE–47481–00	SHOCK ABSORBER 2	1		1			
	8KA–47481–00	SHOCK ABSORBER 2		1				
20	90381–14101	BUSH, SOLID	4	4	4			
21	90387–105G5	COLLAR	2	2	2			
22	95812–10045	BOLT, FLANGE	1	1	1			
23	95812–10070	BOLT, FLANGE	1	1	1			
24	95602–10200	NUT, U FLANGE	2	2	2			
25	8KA–47349–00	BRACKET, ARM PIVOT	1	1	1			
26	95812–10020	BOLT, FLANGE	2	2	2			

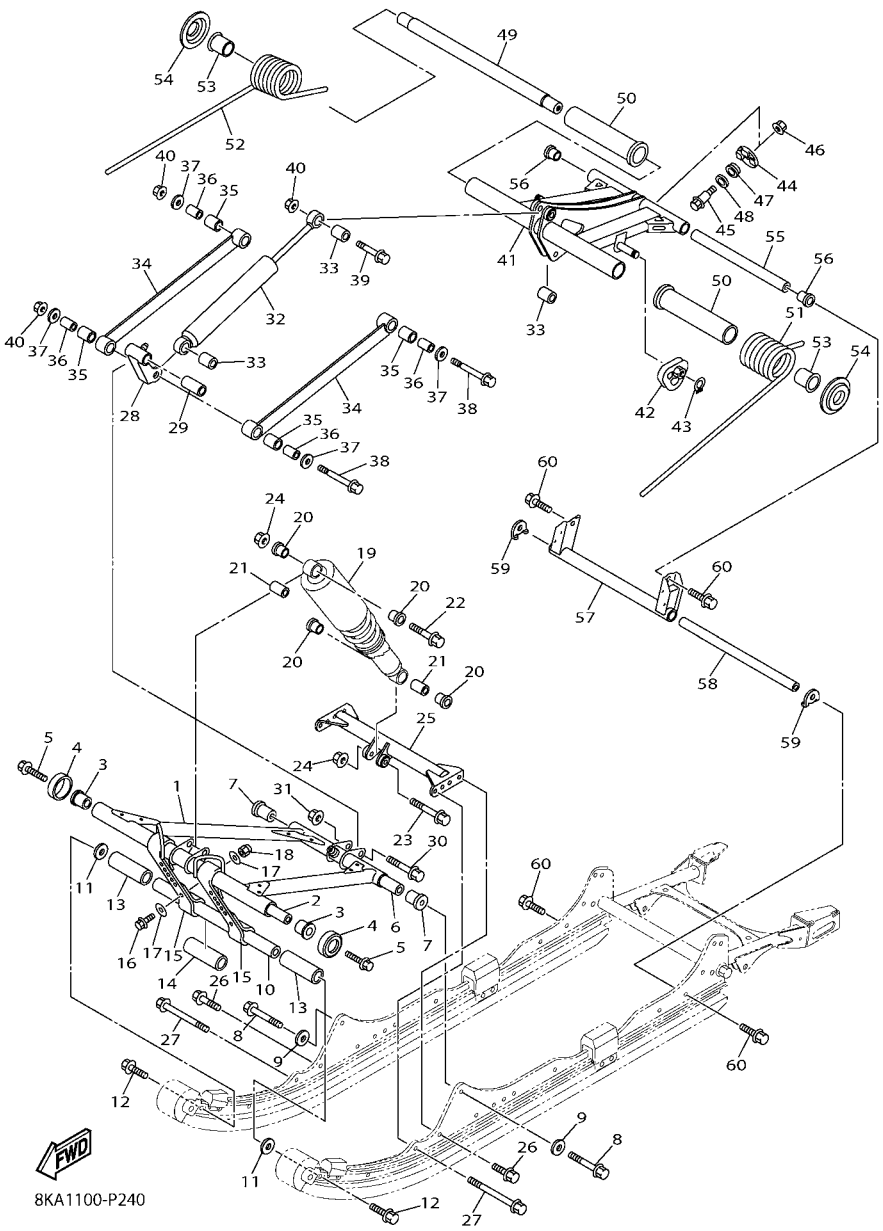

FIG. 24 TRACK SUSPENSION 2

REF. NO.	PART NO.	DESCRIPTION	EUR	RUS	JPN			REMARKS
27	95812–10080	BOLT, FLANGE	2	2	2			
28	8KA–47416–00	BRACKET 2	1	1	1			
29	90387–10054	COLLAR	1	1	1			
30	90105–10390	BOLT, FLANGE	1	1	1			
31	95602–10200	NUT, U FLANGE	1	1	1			
32	8KA–47480–00	SHOCK ABSORBER	1	1	1			
33	90387–10023	COLLAR	3	3	3			
34	8KA–47494–00	ROD, RELAY	2	2	2			
35	90386–16001	BUSH	4	4	4			
36	90387–101A1	COLLAR	4	4	4			
37	90201–10043	WASHER, PLATE	4	4	4			
38	90105–10288	BOLT, FLANGE	2	2	2			
39	90105–10390	BOLT, FLANGE	1	1	1			
40	95602–10200	NUT, U FLANGE	3	3	3			
41	8KA–47332–00	ARM, PIVOT 2	1	1	1			
42	8ES–47447–00	HOOK 2	2	2	2			
43	99009–14400	CIRCLIP	2	2	2			
44	8KA–47448–00	HOOK 3	1	1	1			
45	90109–08186	BOLT	1	1	1			
46	95602–08200	NUT, SELF-LOCKING	1	1	1			
47	90480–16501	GROMMET	1	1	1			
48	90201–12047	WASHER, PLATE	1	1	1			
49	8KA–47475–00	SHAFT 2	1	1	1			
50	8GL–47445–00	PROTECTOR	2	2	2			
51	8KA–47473–00	SPRING, REAR 1(K=2800NMM/DEG)	1	1	1			
52	8KA–47474–00	SPRING, REAR 1(K=2800NMM/DEG)	1	1	1			
53	90381–28108	BUSH, SOLID	2	2	2			

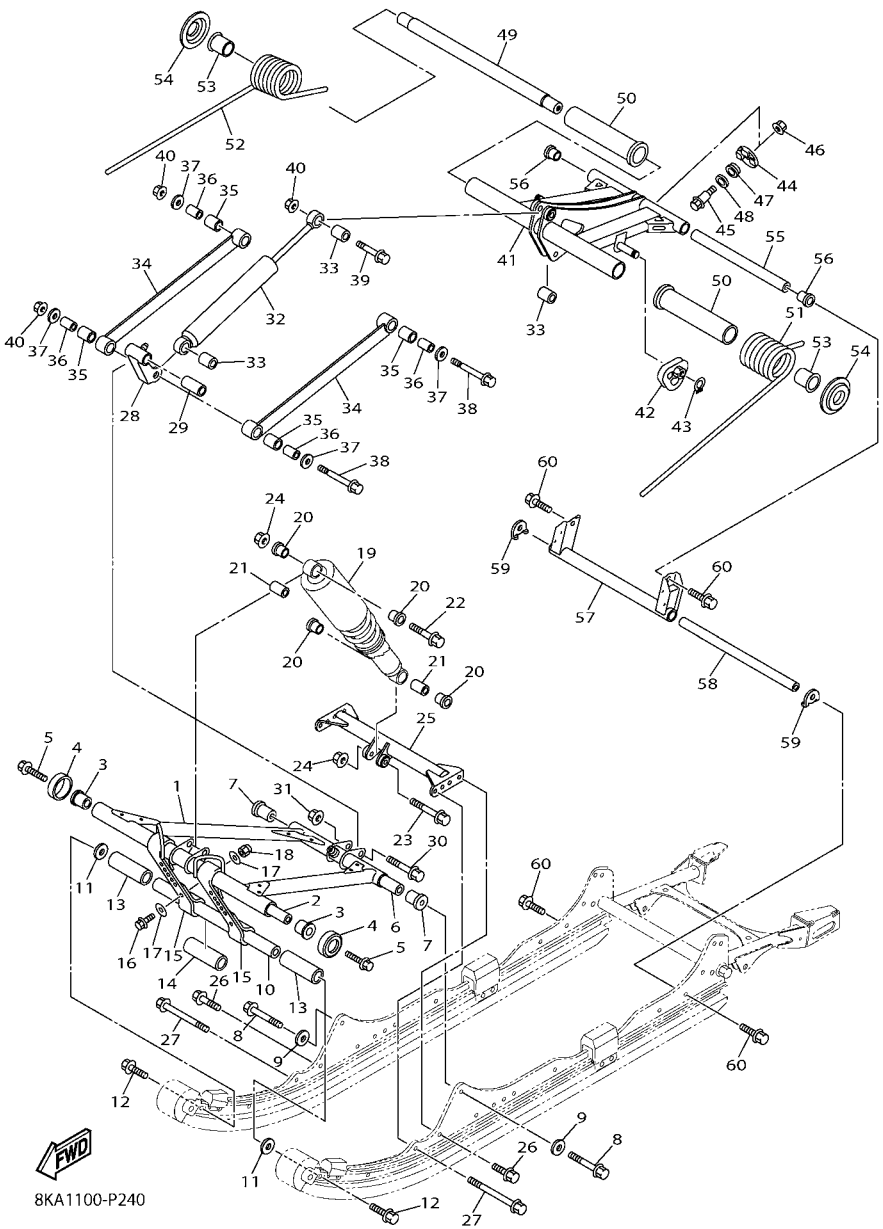

FIG. 24 TRACK SUSPENSION 2

REF. NO.	PART NO.	DESCRIPTION	EUR	RUS	JPN			REMARKS
54	8ES–47467–00	PLATE, GUIDE	2	2	2			
55	8JD–47488–00	SHAFT 6	1	1	1			
56	90381–19111	BUSH, SOLID	2	2	2			
57	8JD–47417–00	BRACKET 3	1	1	1			
58	83R–47485–02	SHAFT 3	1	1	1			
59	90214–10007	WASHER, CLAW	2	2	2			
60	90105–10237	BOLT, FLANGE	4	4	4			

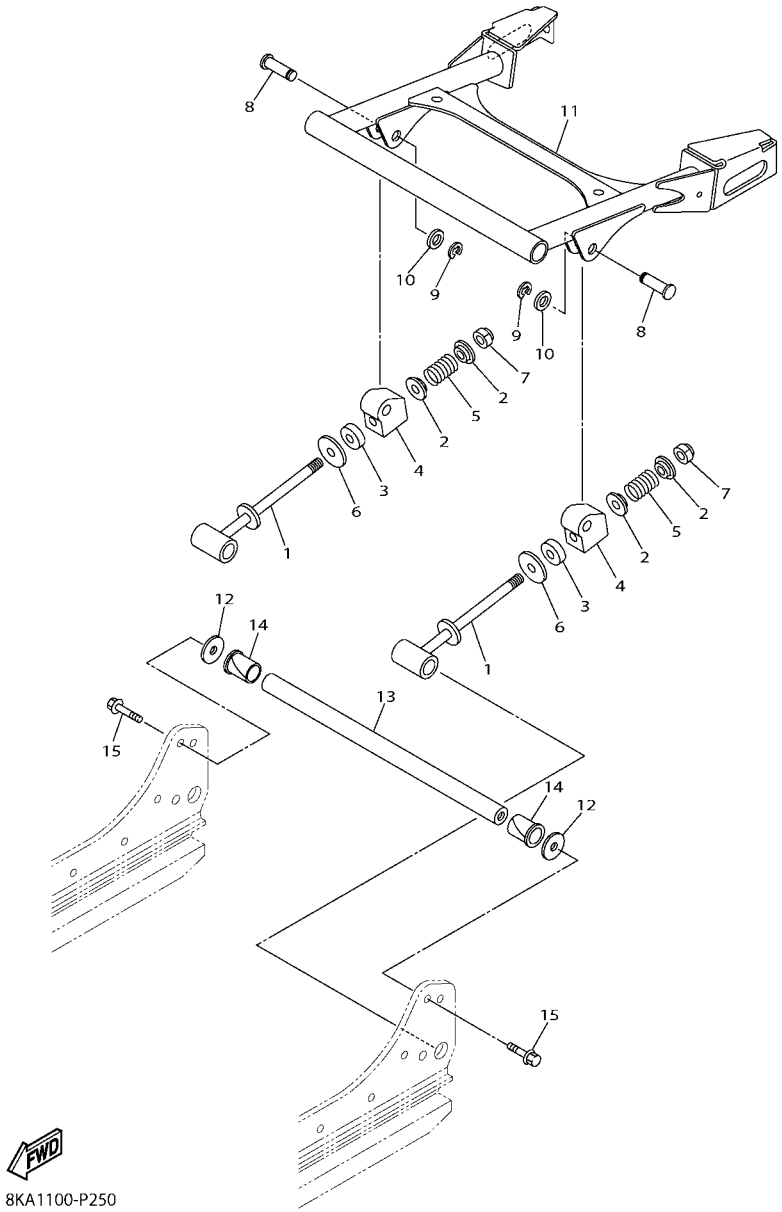

FIG. 25 TRACK SUSPENSION 3

REF. NO.	PART NO.	DESCRIPTION	EUR	RUS	JPN			REMARKS
1	83R–47337–10	SHAFT, PIVOT	2	2	2			
2	83R–23768–00	SEAT, SPRING 1	4	4	4			
3	83R–47335–00	SPRING	2	2	2			
4	8KA–47446–00	HOOK 1	2	2	2			
5	90501–380A0	SPRING, COMPRESSION	2	2	2			
6	90201–12426	WASHER, PLATE	2	2	2			
7	90185–12058	NUT, SELF-LOCKING	2	2	2			
8	90249–12006	PIN	2	2	2			
9	99009–12400	CIRCLIP	2	2	2			
10	90201–12178	WASHER, PLATE	2	2	2			
11	8KA–47333–00	ARM, PIVOT 3	1	1	1			
12	90201–10742	WASHER, PLATE	2	2	2			
13	83R–47485–02	SHAFT 3	1	1	1			
14	90381–19111	BUSH, SOLID	2	2	2			
15	90105–10237	BOLT, FLANGE	2	2	2			

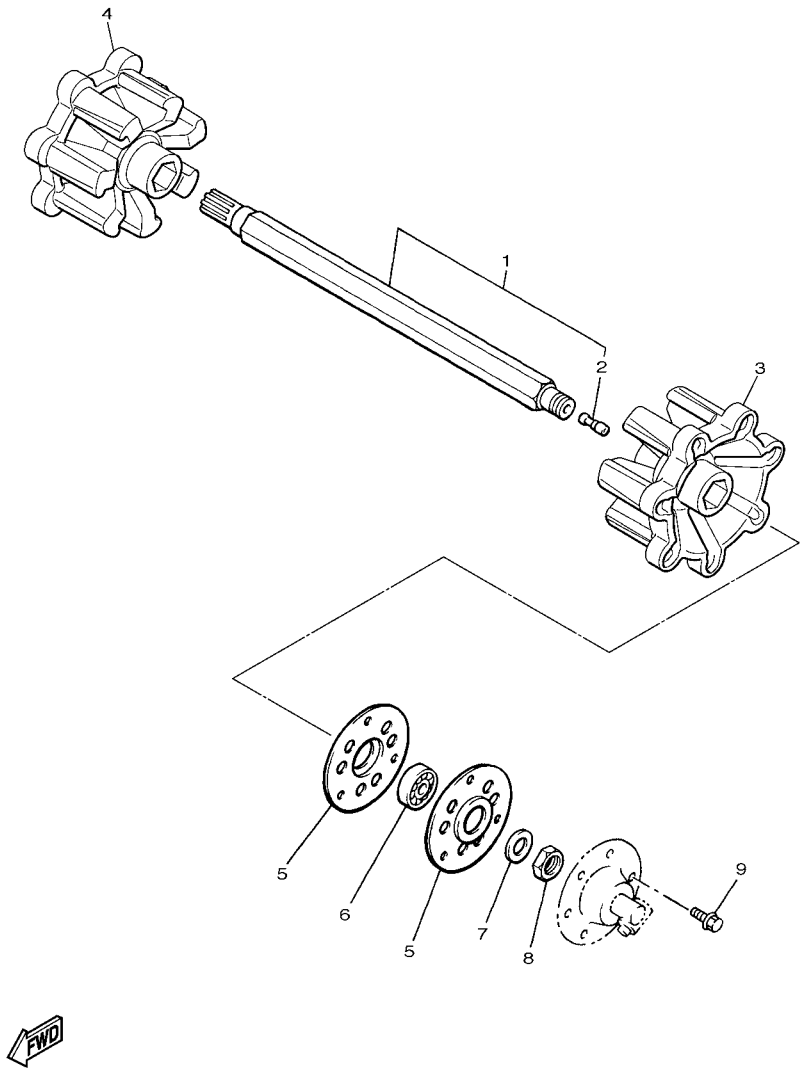

FIG. 26 TRACK DRIVE 1

REF. NO.	PART NO.	DESCRIPTION	EUR	RUS	JPN			REMARKS
1	83R–W4751–10	AXLE, FRONT	1	1	1			
2	8K4–47577–00	.CONNECTOR	1	1	1			
3	8JD–47531–00	WHEEL, SPROCKET 1	1	1	1			
4	8JD–47532–00	WHEEL, SPROCKET 2	1	1	1			
5	83R–47551–00	HOUSING, FRONT AXLE	2	2	2			
6	93306–00507	BEARING	1	1	1			
7	90208–25045	WASHER, CONICAL SPRING	1	1	1			
8	90170–25367	NUT	1	1	1			
9	95822–08014	BOLT, FLANGE	3	3	3			

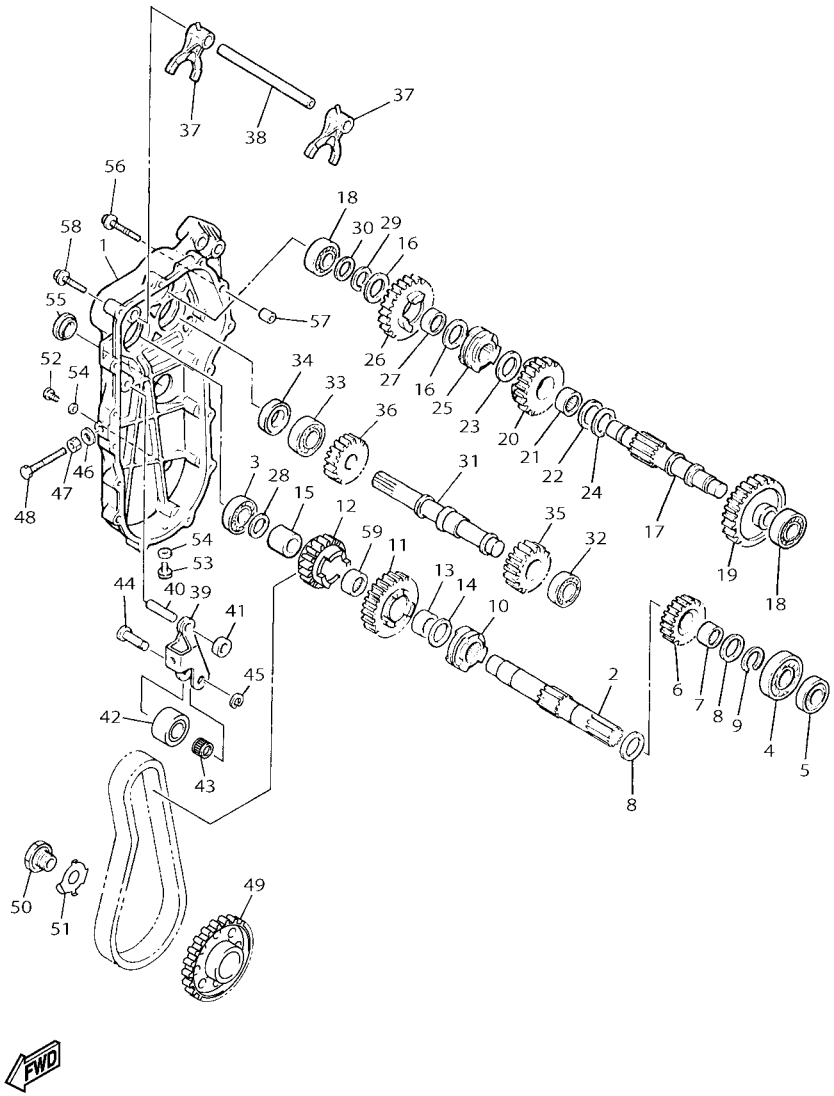

FIG. 27 TRACK DRIVE 2

REF. NO.	PART NO.	DESCRIPTION	EUR	RUS	JPN			REMARKS
1	83R–47543–00	CAP, HOUSING	1	1	1			
2	85R–17421–00	AXLE, DRIVE	1	1	1			
3	93306–20402	BEARING	1	1	1			
4	93306–37206	BEARING	1	1	1			
5	93102–22014	OIL SEAL	1	1	1			
6	83R–17121–00	GEAR, 2ND PINION (22T)	1	1	1			
7	93311–42265	BEARING	1	1	1			
8	90201–224L4	WASHER, PLATE	2	2	2			
9	99009–22400	CIRCLIP	1	1	1			
10	83R–17492–10	DOG, TRANSMISSION SHIFT	1	1	1			
11	8AT–17131–00	GEAR, 3RD PINION (28T)	1	1	1			
12	8KA–17682–00	SPROCKET,CHAIN DRIVE (18T)	1	1	1			
13	93317–32241	BEARING	1	1	1			
14	90201–224L4	WASHER, PLATE	1	1	1			
15	90387–226V7	COLLAR	1	1	1			
16	90201–20792	WASHER, PLATE	2	2	2			
17	83R–17431–00	AXLE, COUNTER	1	1	1			
18	93306–20321	BEARING	2	2	2			
19	8AT–17141–00	GEAR, 4TH PINION (28T)	1	1	1			
20	83R–17151–00	GEAR, 5TH PINION (22T)	1	1	1			
21	93317–32241	BEARING	1	1	1			
22	90201–224L4	WASHER, PLATE	1	1	1			
23	90201–225L2	WASHER, PLATE	1	1	1			
24	99009–22400	CIRCLIP	1	1	1			
25	83R–17492–10	DOG, TRANSMISSION SHIFT	1	1	1			
26	83R–17143–00	GEAR, REVERSE PINION 1 (27T)	1	1	1			
27	93317–22021	BEARING	1	1	1			

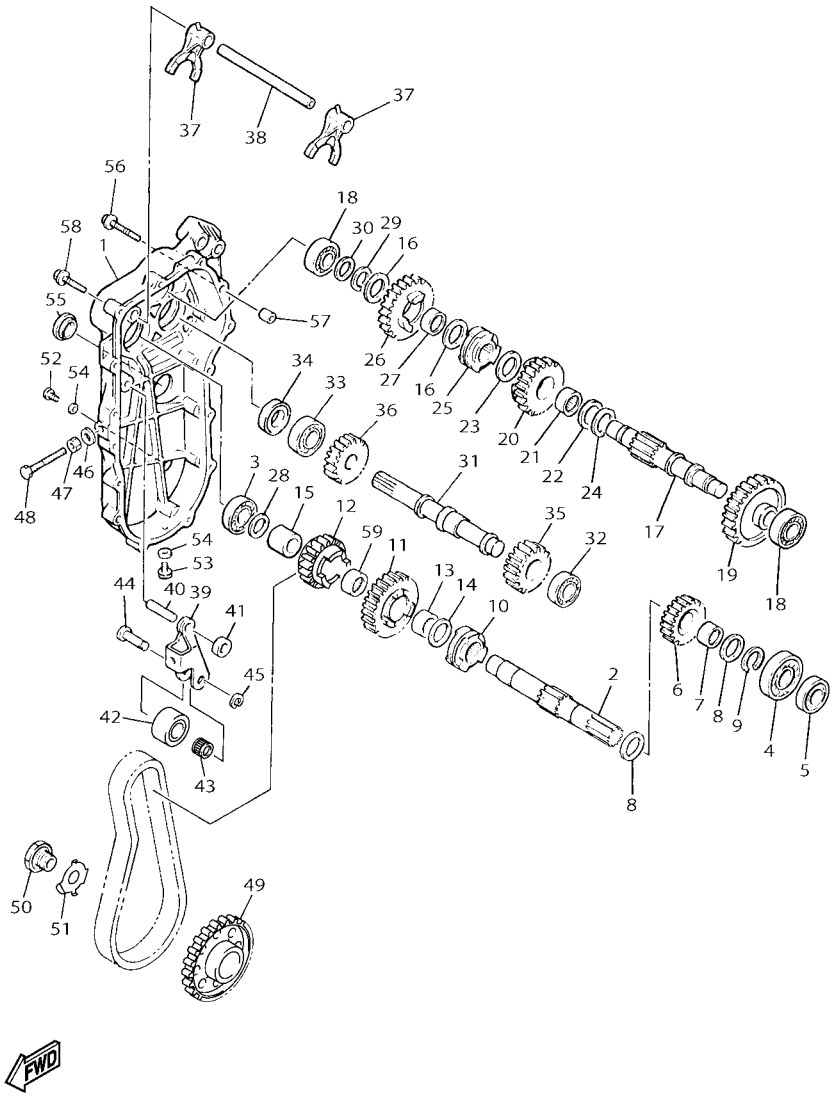

FIG. 27 TRACK DRIVE 2

REF. NO.	PART NO.	DESCRIPTION	EUR	RUS	JPN			REMARKS
28	90201–20792	WASHER, PLATE	1	1	1			
29	99009–20400	CIRCLIP	1	1	1			
30	90201–171J5	WASHER, PLAIN	1	1	1			
31	83R–17432–01	AXLE, IDLE	1	1	1			
32	93306–20321	BEARING	1	1	1			
33	93306–20402	BEARING	1	1	1			
34	93102–20010	OIL SEAL	1	1	1			
35	83R–17243–00	GEAR, REVERSE WHEEL 1 (19T)	1	1	1			
36	83R–17153–00	GEAR, REVERSE PINION 2 (20T)	1	1	1			
37	83R–18511–00	FORK, SHIFT 1	2	2	2			
38	83R–18531–00	BAR, SHIFT FORK GUIDE 1	1	1	1			
39	83R–47613–00	HOLDER	1	1	1			
40	93612–44229	PIN, DOWEL	1	1	1			
41	90387–121E8	COLLAR	1	1	1			
42	8FA–47612–00	WHEEL	1	1	1			
43	93310–212R6	BEARING	1	1	1			
44	90249–12216	PIN	1	1	1			
45	99009–12400	CIRCLIP	1	1	1			
46	90210–10004	WASHER, SEAL	1	1	1			
47	95302–10700	NUT	1	1	1			
48	90101–10357	BOLT	1	1	1			
49	8KA–47548–00	SPROCKET,CHAIN DRIVE (38T)	1	1	1			
50	90101–27001	BOLT	1	1	1			
51	90215–27004	WASHER, LOCK	1	1	1			
52	97007–06010	BOLT	1	1	1			
53	98907–06008	SCREW, BIND	1	1	1			
54	90430–06016	GASKET	2	2	2			

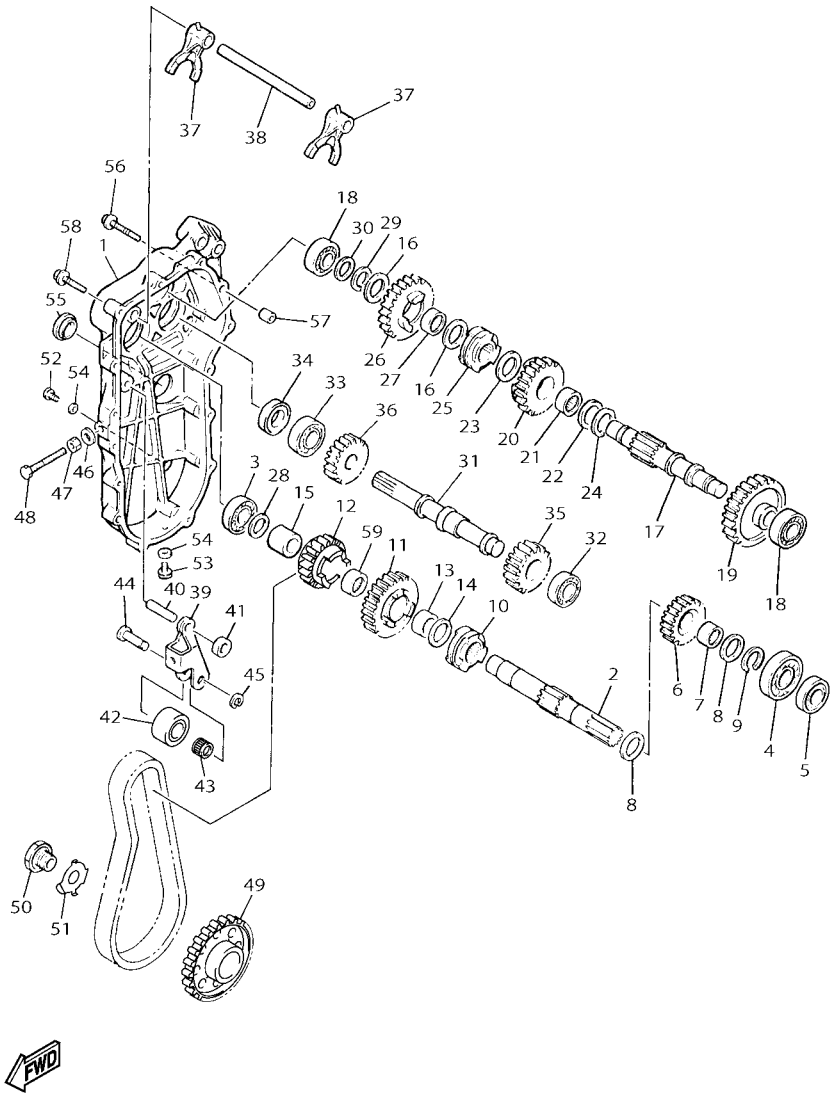

FIG. 27 TRACK DRIVE 2

REF. NO.	PART NO.	DESCRIPTION	EUR	RUS	JPN			REMARKS
55	90338–30219	PLUG	1	1	1			
56	95812–06045	BOLT, FLANGE	2	2	2			
57	99530–10114	PIN, DOWEL	2	2	2			
58	95812–06035	BOLT, FLANGE	13	13	13			
59	93317–222B2	BEARING	1	1	1			

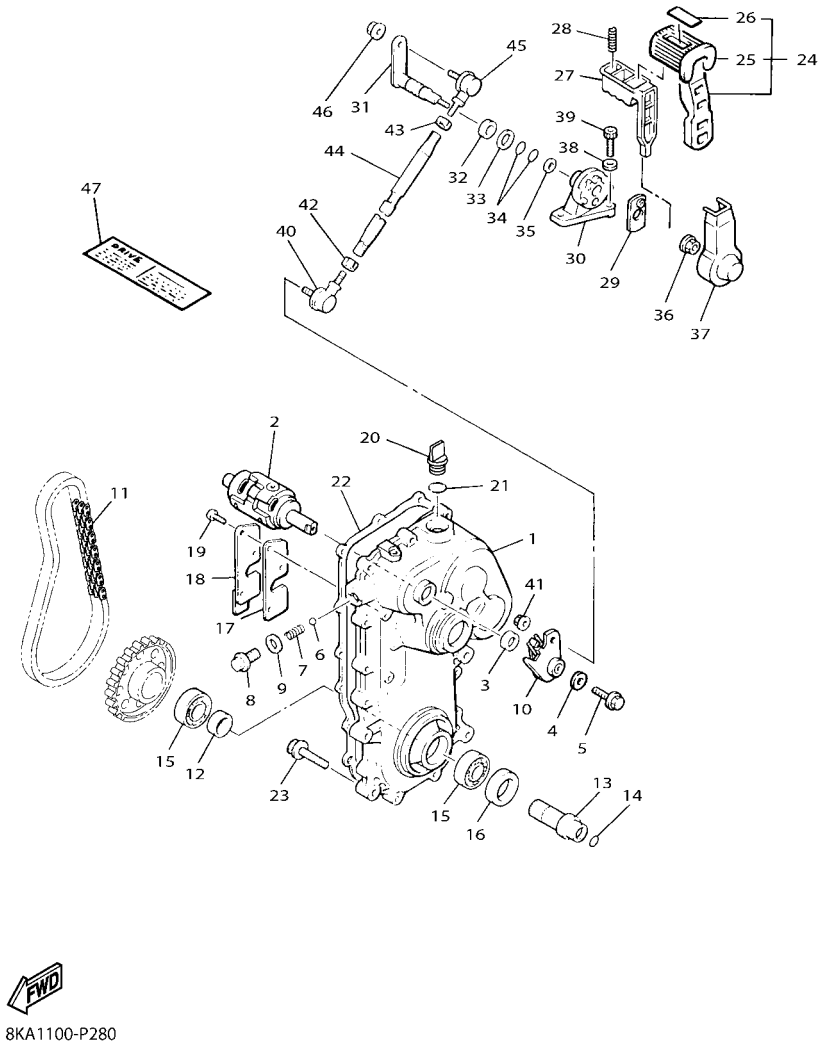

FIG. 28 TRACK DRIVE 3

REF. NO.	PART NO.	DESCRIPTION	EUR	RUS	JPN			REMARKS
1	87R–47541–00	HOUSING, CHAIN	1	1	1			
2	89N–18540–00	SHIFT CAM ASSY	1	1	1			
3	93102–15212	OIL SEAL	1	1	1			
4	90201–06072	WASHER, PLATE	1	1	1			
5	90105–06405	BOLT, FLANGE	1	1	1			
6	93503–08007	BALL	1	1	1			
7	90501–147A6	SPRING, COMPRESSION	1	1	1			
8	90105–14003	BOLT, FLANGE	1	1	1			
9	90430–14194	GASKET	1	1	1			
10	89N–18130–01	SHIFT SHAFT ASSY	1	1	1			
11	94591–63070	CHAIN	1	1	1			
12	90387–405T8	COLLAR	1	1	1			
13	83R–47571–00	JOURNAL 1	1	1	1			
14	93210–28763	O-RING	1	1	1			
15	93306–90802	BEARING	2	2	2			
16	93102–46394	OIL SEAL	1	1	1			
17	85R–47544–01	GASKET	1	1	1			
18	88N–47591–00	PLATE	1	1	1			
19	90154–06050	SCREW, BINDING	3	3	3			
20	3Y1–15363–10	PLUG, OIL	1	1	1			
21	93210–19123	O-RING	1	1	1			
22	85R–47592–00	GASKET	1	1	1			
23	95812–08040	BOLT, FLANGE	4	4	4			
24	83R–18150–00	SHIFT LEVER ASSY	1	1	1			
25	52G–18113–00	.COVER, SHIFT PEDAL	1	1	1			
26	83R–1815A–00	.LABEL	1	1	1			
27	59V–18174–00	KNOB, SHIFT LEVER	1	1	1			

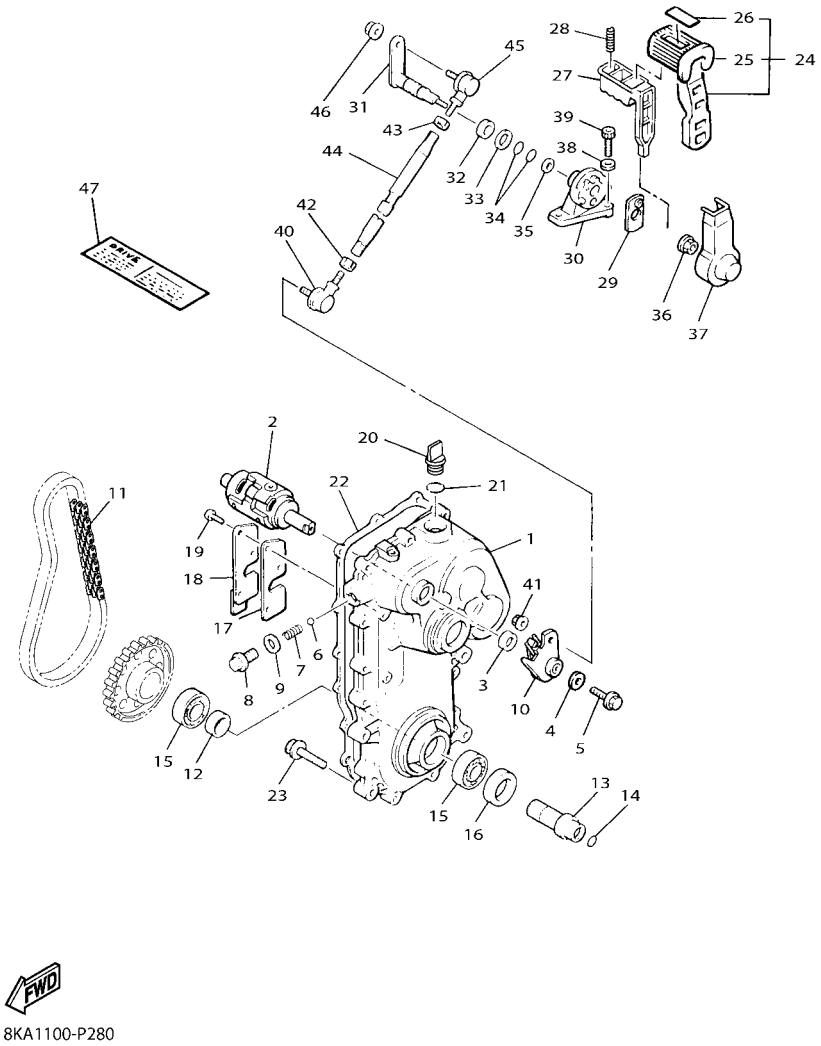

FIG. 28 TRACK DRIVE 3

REF. NO.	PART NO.	DESCRIPTION	EUR	RUS	JPN			REMARKS
28	90501–101A7	SPRING, COMPRESSION	1	1	1			
29	59V–18561–00	PLATE, SIDE 1	1	1	1			
30	83R–18153–00	GUIDE, SHIFT RETURN SPRING	1	1	1			
31	83R–18341–00	SHAFT, RINK	1	1	1			
32	90387–145T7	COLLAR	1	1	1			
33	90201–144J2	WASHER, PLATE	1	1	1			
34	93210–10010	O-RING	2	2	2			
35	90201–064J1	WASHER, PLATE	1	1	1			
36	95702–06500	NUT, FLANGE	1	1	1			
37	59V–18433–00	COVER, SHIFT SPRING	1	1	1			
38	92902–06600	WASHER, PLATE	3	3	3			
39	91312–06025	BOLT	3	3	3			
40	3X3–18157–10	JOINT 2	1	1	1			
41	95702–06500	NUT, FLANGE	1	1	1			
42	95312–08600	NUT	1	1	1			
43	90170–08261	NUT	1	1	1			
44	83R–18116–00	JOINT, ROD 1	1	1	1			
45	3X3–18156–10	JOINT 1	1	1	1			
46	95702–06500	NUT, FLANGE	1	1	1			
47	8JD–47578–00	LABEL 1	1	1				

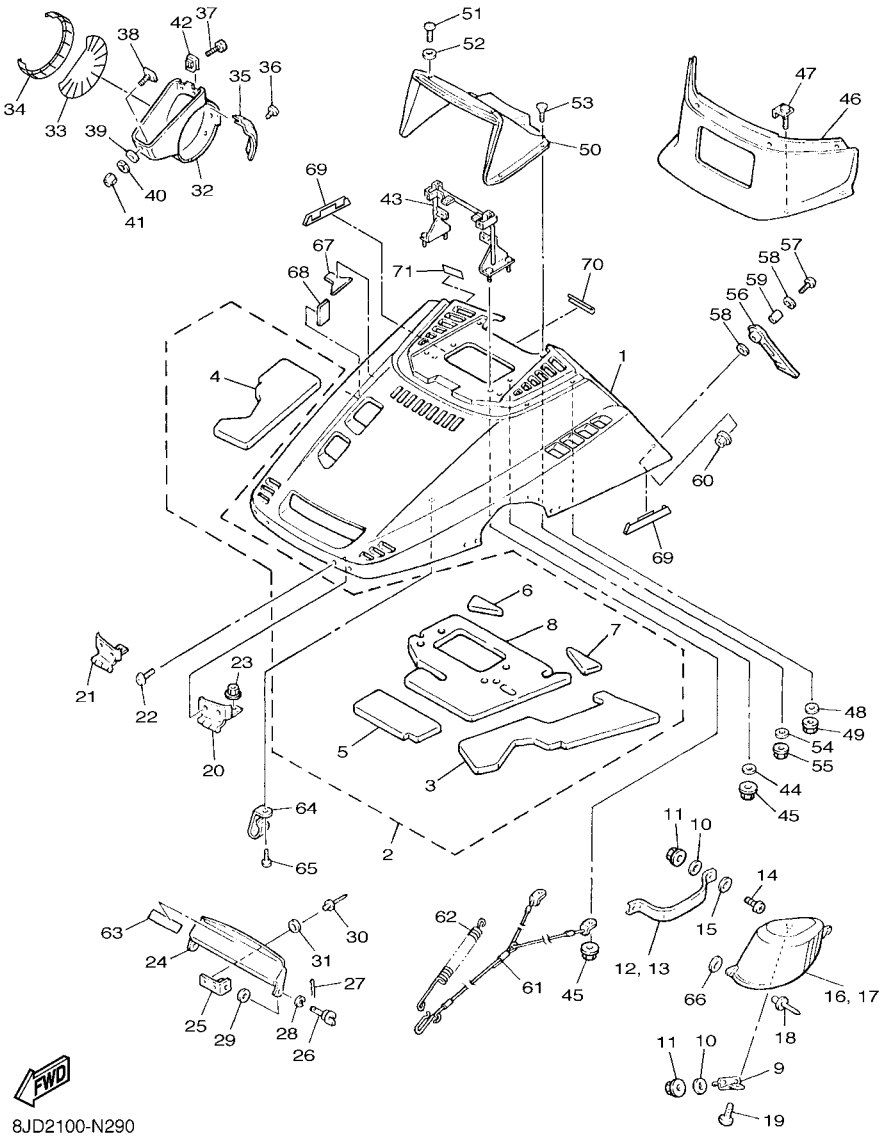

FIG. 29 SHROUD

REF. NO.	PART NO.	DESCRIPTION	EUR	RUS	JPN			REMARKS
1	8AC–77111–B0–P2	SHROUD	1	1	1			UR FOR SMX
	8AC–77111–B0–P5	SHROUD	1	1	1			UR FOR S3
2	8JD–W7726–00	LINING SET	1	1	1			
3	8AT–77261–00	.LINING, SHROUD 1	1	1	1			
4	8JD–77268–00	.LINING,SHROUD 8	1	1	1			
5	8AT–77264–00	.LINING, SHROUD 4	1	1	1			
6	8AT–77265–00	.LINING, SHROUD 5	1	1	1			
7	8AT–77266–00	.LINING, SHROUD 6	1	1	1			
8	8AT–77267–00	.LINING, SHROUD 7	1	1	1			
9	8AT–77125–00	STAY 1	2	2	2			
10	92902–06200	WASHER	8	8	8			
11	95702–06300	NUT, NYLON	8	8	8			
12	8AT–77153–00	PLATE, BACK UP 1	1	1	1			
13	8AT–77154–00	PLATE, BACK UP 2	1	1	1			
14	92502–06020	SCREW, PAN HEAD	4	4	4			
15	92902–06600	WASHER, PLATE	4	4	4			
16	8AT–77121–00	HOOD 3 (L.H)	1	1	1			
17	8AT–77122–00	HOOD 4 (R.H)	1	1	1			
18	90267–48018	RIVET, BLIND (4.8X18.6 BLACK)	4	4	4			
19	97702–50016	SCREW, TAPPING	2	2	2			
20	83R–77140–01	HINGE ASSY	1	1	1			
21	83R–7714A–01	HINGE ASSY 2	1	1	1			
22	98907–06014	SCREW, BIND	4	4	4			
23	95702–06300	NUT, NYLON	4	4	4			
24	83R–77185–00	PLATE 1	1	1	1			
25	83R–77125–00	STAY 1	2	2	2			
26	90122–05022	BOLT, WING	2	2	2			

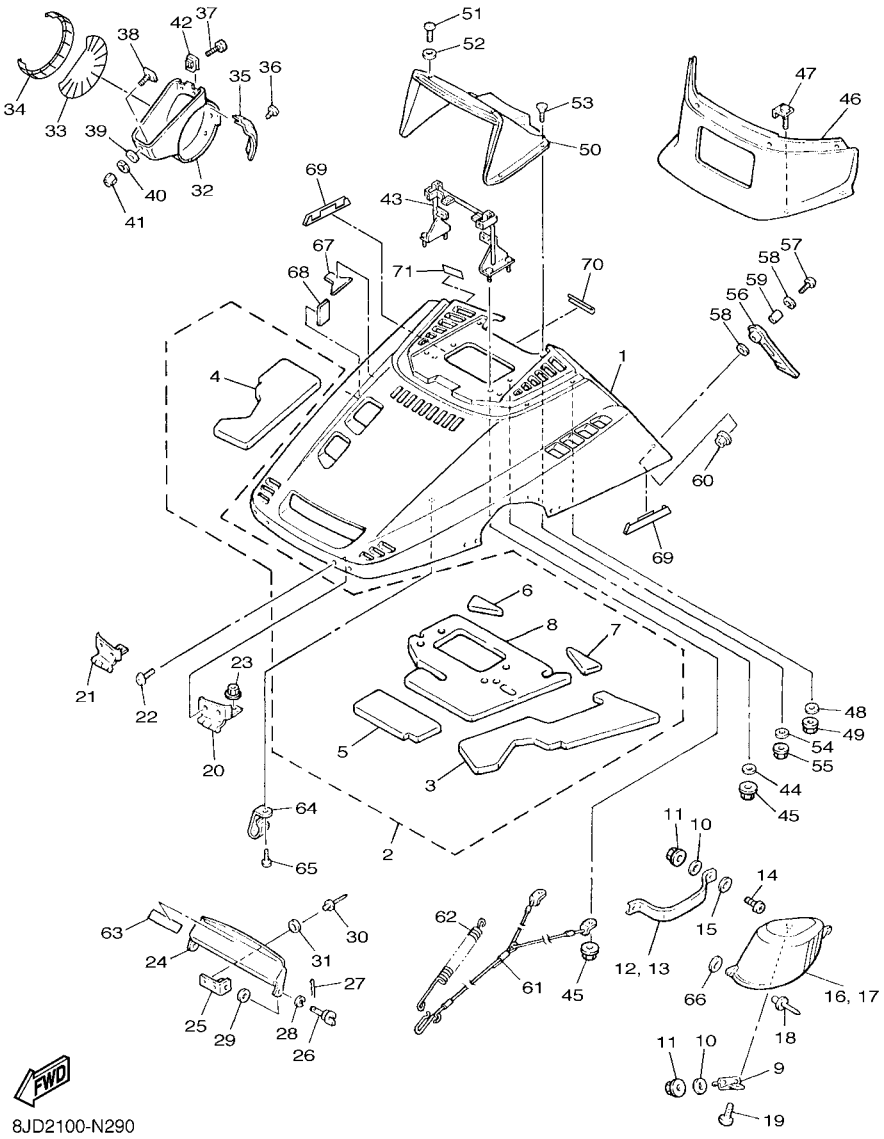

FIG. 29 SHROUD

REF. NO.	PART NO.	DESCRIPTION	EUR	RUS	JPN			REMARKS
27	90468–10003	CLIP	2	2	2			
28	92907–05100	WASHER, SPRING	2	2	2			
29	90202–05088	WASHER, PLATE	2	2	2			
30	90267–48079	RIVET, BLIND (4.8X16.1)	4	4	4			
31	90201–043H7	WASHER, PLATE	4	4	4			
32	83R–77194–00	DUCT	1	1	1			
33	8JD–7717E–00	TAPE 1	1	1	1			
34	8JD–7717F–00	TAPE 2	1	1	1			
35	83R–77515–00	BUSH, RUBBER 1	1	1	1			
36	90269–05039	RIVET	3	3	3			
37	98902–06014	SCREW, BIND	2	2	2			
38	83R–77186–00	PLATE 2	1	1	1			
39	90201–06078	WASHER, PLATE	1	1	1			
40	92902–06100	WASHER, SPRING	1	1	1			
41	95302–06600	NUT	1	1	1			
42	83R–77144–00	NUT	2	2	2			
43	83R–77241–00	SRAY,FAIRING	1	1	1			
44	90201–06078	WASHER, PLATE	3	3	3			
45	95702–06300	NUT, NYLON	4	4	4			
46	8AC–77231–40	FAIRING	1	1	1			UR FOR SMX
	8AC–77231–80	FAIRING	1	1	1			UR FOR S3
47	83R–77212–00	BOLT, WIND SHIELD	4	4	4			
48	90201–06078	WASHER, PLATE	2	2	2			
49	95702–06300	NUT, NYLON	4	4	4			
50	86V–77251–01	COVER, HEADLIGHT	1	1				
	87R–77251–01	COVER, HEADLIGHT			1			
51	98907–05012	SCREW, BIND	2	2	2			

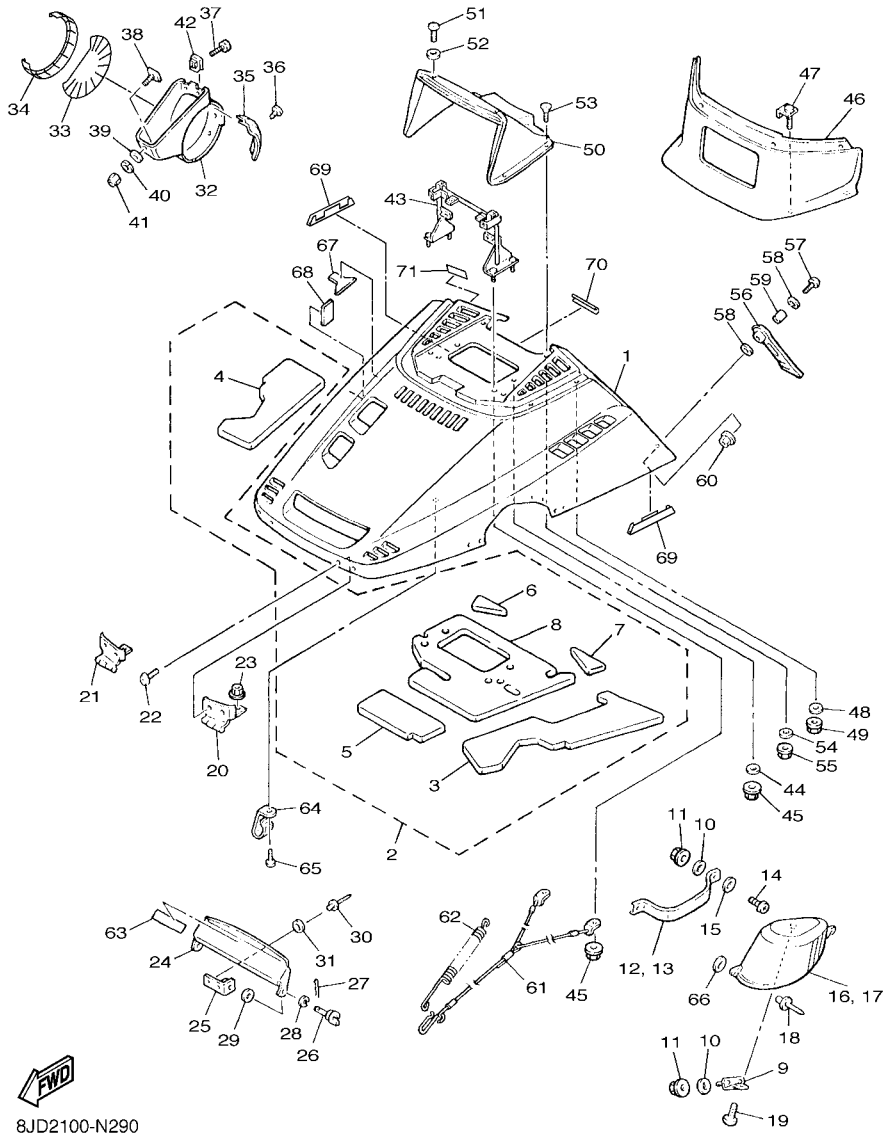

FIG. 29 SHROUD

REF. NO.	PART NO.	DESCRIPTION	EUR	RUS	JPN			REMARKS
52	90201–06042	WASHER, PLATE	2	2	2			
53	98707–05016	SCREW, FLAT HEAD	4	4	4			
54	90201–05029	WASHER, PLATE	4	4	4			
55	95702–05300	NUT, NYLON	4	4	4			
56	8JN–77171–00	BODY, LATCH 1	2	2	2			
57	98907–06025	SCREW, BIND	2	2	2			
58	90201–06557	WASHER, PLATE	4	4	4			
59	90387–06241	COLLAR	2	2	2			
60	95702–06500	NUT, FLANGE	2	2	2			
61	83R–77118–01	STOPPER, SHROUD	1	1	1			
62	838–77159–00	CLAMP, ROD	1	1	1			
63	8AC–2815P–S0	LABEL, NOTICE 1	1	1				
	8AC–2815P–J0	LABEL, NOTICE 1			1			
64	90461–08113	CLAMP	3	3	3			
65	97702–50016	SCREW, TAPPING	2	2	2			
66	90201–043H7	WASHER, PLATE	4	4	4			
67	8AT–2199H–00	SHIELD, HEAT	1	1	1			
68	8AT–77196–00	DAMPER, SHROUD	1	1	1			
69	8JN–77196–00	DAMPER, SHROUD	2	2	2			
70	8JN–77588–00	DAMPER	1	1	1			
71	8JN–77764–R0	LABEL, WARNING 4		1				

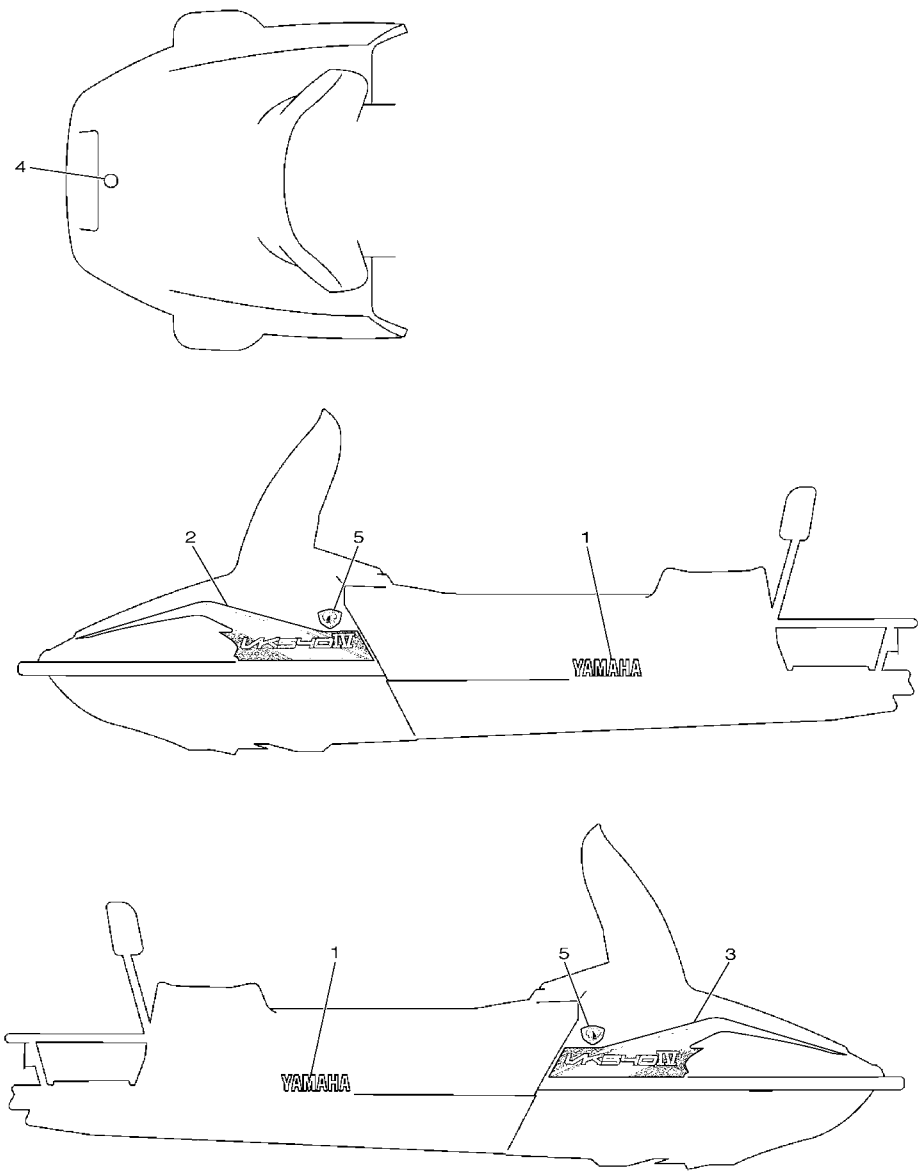

8JD1100-M300

FIG. 30 EMBLEM

REF. NO.	PART NO.	DESCRIPTION	EUR	RUS	JPN			REMARKS
1	99246–00280	EMBLEM, YAMAHA	2	2	2			
2	8AC–7711A–50	GRAPHIC 1	1	1	1			UR FOR SMX
	8AC–7711A–70	GRAPHIC 1	1	1	1			UR FOR S3
3	8AC–7711B–50	GRAPHIC 2	1	1	1			UR FOR SMX
	8AC–7711B–70	GRAPHIC 2	1	1	1			UR FOR S3
4	8AC–2414B–01	EMBLEM	1	1	1			
5	8JE–7715A–00	EMBLEM 3D	2	2	2			

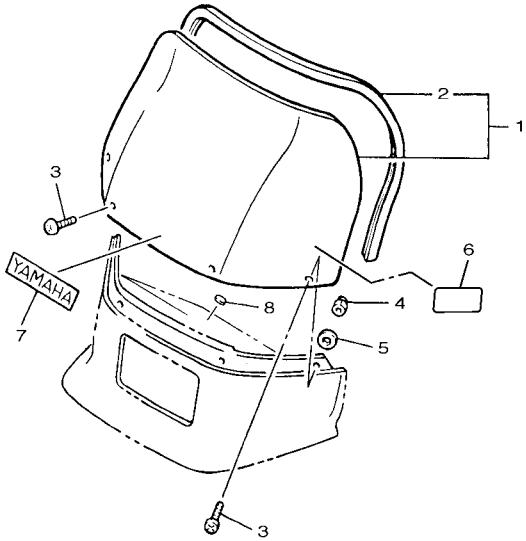

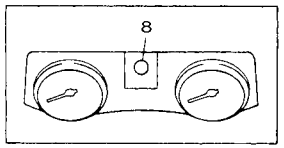

8JD1100-M310

FIG. 31 WINDSHIELD

REF. NO.	PART NO.	DESCRIPTION	EUR	RUS	JPN			REMARKS
1	86V–77210–10	WINDSHIELD COMP.	1	1	1			
2	87S–77213–10	.TRIM, UPPER	1	1	1			
3	90154–05047	SCREW, BINDING	4	4	4			
4	90176–05059	NUT, CROWN	2	2	2			
5	90201–05033	WASHER, PLATE	2	2	2			
6	4B5–2815K–20	LABEL, NOTICE WINDSHIELD 1			1			
7	99246–00120	EMBLEM, YAMAHA	1	1	1			
8	4XV–2341B–00	EMBLEM	1	1	1			

FIG. 32 GUARD & LUGGAGE BOX

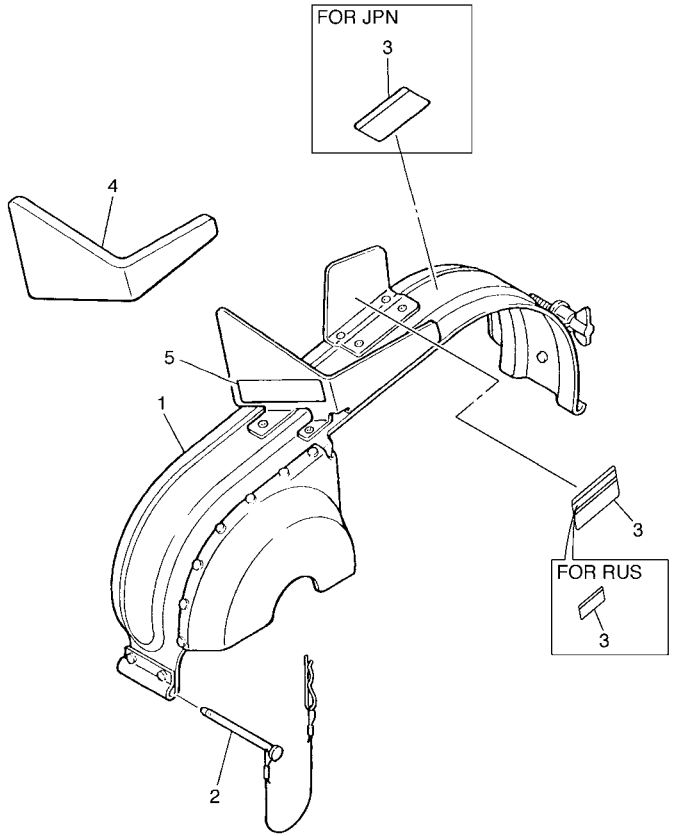

8ACK100-F320

REF. NO.	PART NO.	DESCRIPTION	EUR	RUS	JPN			REMARKS
1	8AT–77311–00	GUARD, DRIVE	1	1	1			
2	83R–77327–00	SHAFT	1	1	1			
3	86D–77762–00	LABEL, WARNING 2	1					
	8AC–77762–R1	LABEL, WARNING 2		1				
	8BD–77762–21	LABEL, WARNING 2			1			
4	8AT–77319–00	DAMPER 1	1	1	1			
5	8JD–1417E–00	LABEL, CAUTION	1	1				

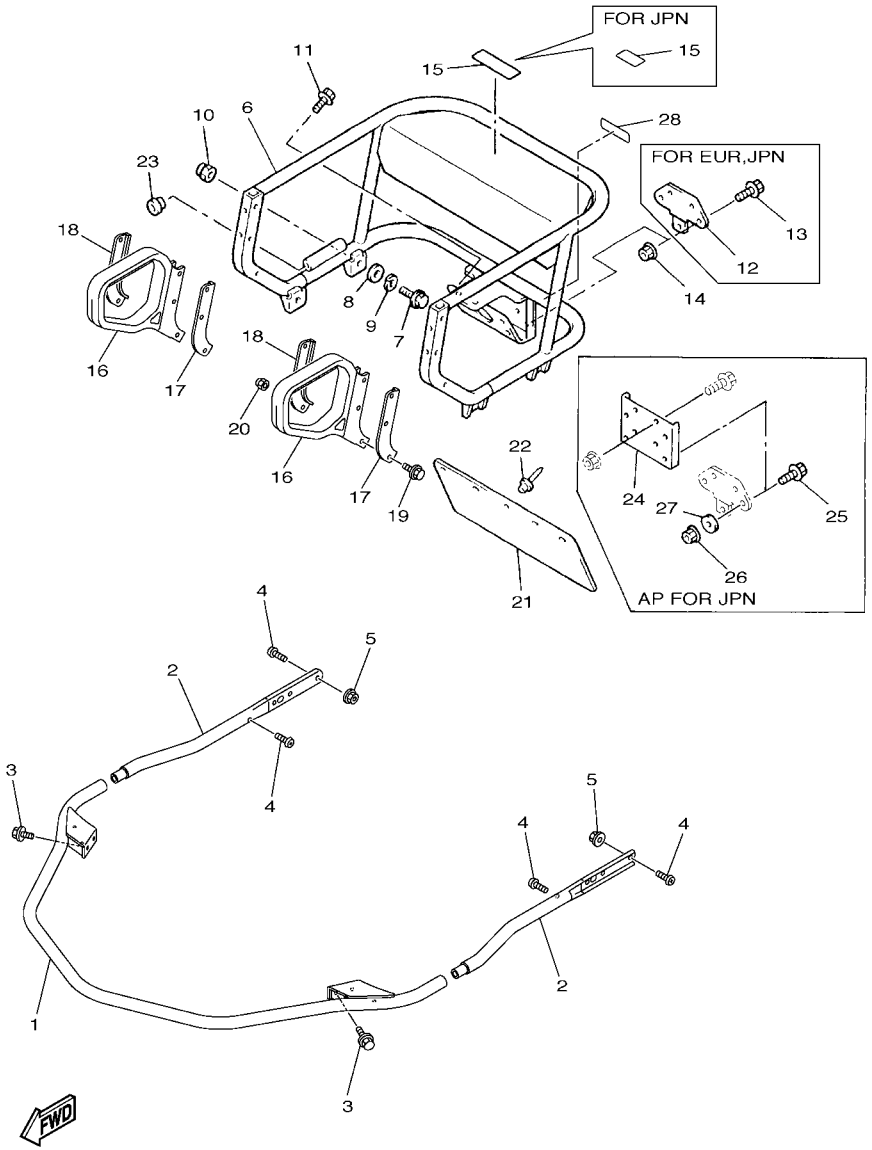

FIG. 33 BUMPER

REF. NO.	PART NO.	DESCRIPTION	EUR	RUS	JPN			REMARKS
1	8JN–77511–00	BUMPER, FRONT 1	1	1	1			
2	8JN–77513–00	BUMPER, FRONT 3	2	2	2			
3	90105–08408	BOLT, FLANGE	4	4	4			
4	90149–08230	SCREW	7	7	7			
5	95702–08500	NUT, FLANGE	1	1	1			
6	8AC–77540–00	REAR BUMPER COMP.	1	1	1			
7	95822–08014	BOLT, FLANGE	4	4	4			
8	92907–08200	WASHER	4	4	4			
9	92907–08100	WASHER, SPRING	4	4	4			
10	95307–08800	NUT	4	4	4			
11	95827–08020	BOLT, FLANGE	6	6	6			
12	84R–77592–00	BRACKET, HITCH 2	1		1			
13	95827–08020	BOLT, FLANGE	4		4			
14	95602–08200	NUT, SELF-LOCKING	4	4	4			
15	8FM–24897–11	EMBLEM	1	1				
	4KN–24877–C0	LABEL, CAUTION			1			
16	8JD–77571–00	GRIP, ASSIST 1	2	2	2			
17	8JD–77531–00	BRACKET, FRONT	2	2	2			
18	8JD–77532–00	BRACKET, FRONT (R.H)	2	2	2			
19	95807–08045	BOLT, FLANGE	6	6	6			
20	90176–08063	NUT, CROWN	6	6	6			
21	83R–77595–00	FLAP	1	1	1			
22	90267–48086	RIVET, BLIND (4.8X19 BLACK)	5	5	5			
23	90480–15268	GROMMET	2	2	2			
24	80M–77591–00	BRACKET, HITCH 1			1			AP
25	95827–08025	BOLT, FLANGE			4			AP
26	95717–08300	NUT, FLANGE			4			AP

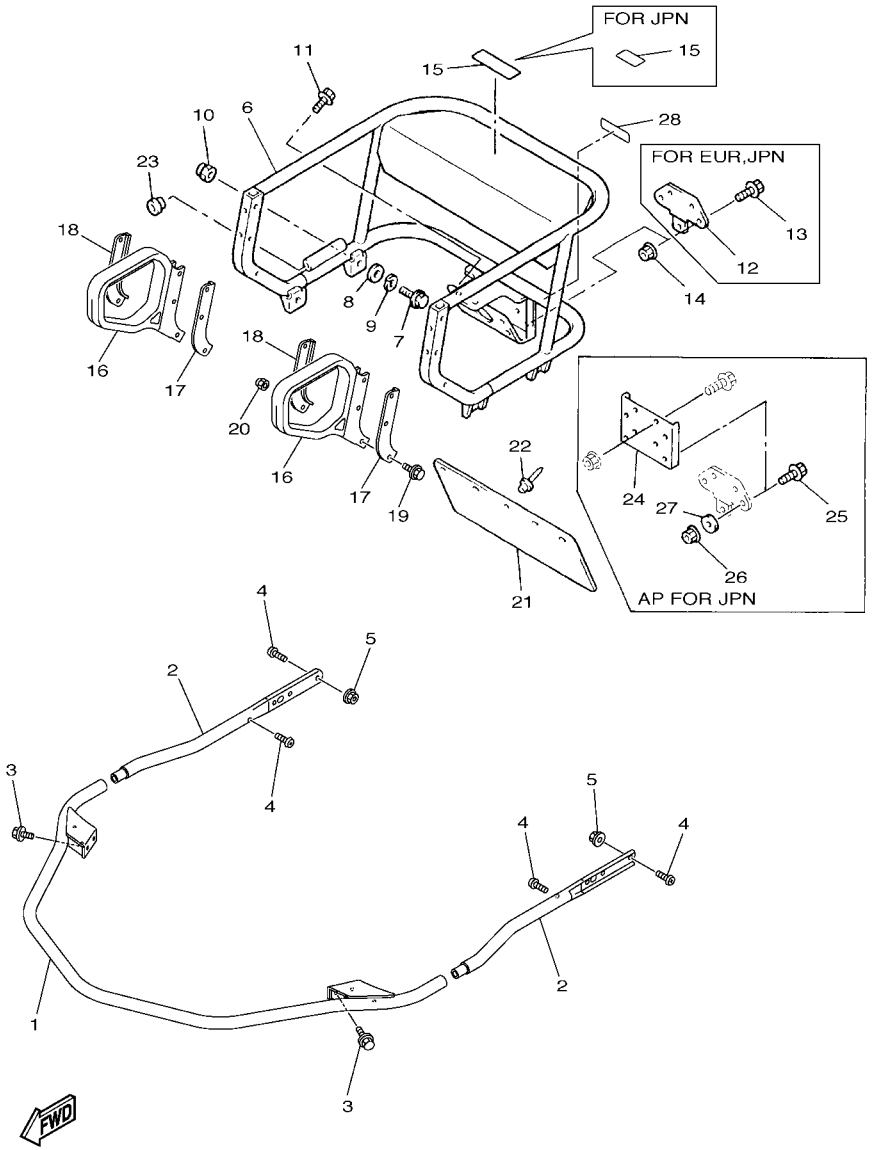

FIG. 33 BUMPER

REF. NO.	PART NO.	DESCRIPTION	EUR	RUS	JPN			REMARKS
27	92907–08600	WASHER, PLATE			4			AP
28	8HF–2817S–00	LABEL, PULLING LOAD LIMIT	1	1				
	8GS–2817S–J0	LABEL, PULLING LOAD LIMIT			1			

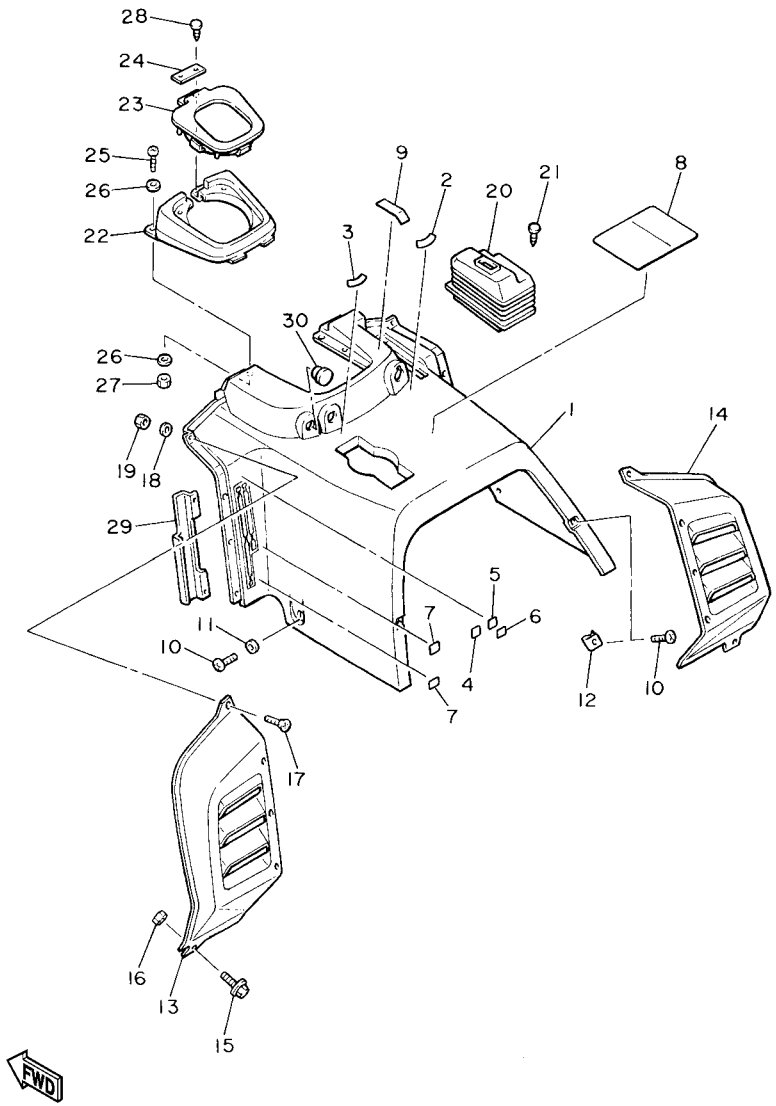

8JD1100-M340

FIG. 34 INSTRUMENT PANEL

REF. NO.	PART NO.	DESCRIPTION	EUR	RUS	JPN			REMARKS
1	86V–77711–00	PANEL, INSTRUMENT	1	1	1			
2	8V0–77741–20	INDICATOR 1	1	1	1			
3	8U9–77742–00	INDICATOR 2	1	1	1			
4	87A–77743–00	INDICATOR 3	1	1	1			
5	87A–77742–00	INDICATOR 2	1	1	1			
6	87A–77741–00	INDICATOR 1	1	1	1			
7	87A–77745–00	INDICATOR 5	2	2	2			
8	8AC–77761–10	LABEL, WARNING 1	1					
	8AC–77761–R1	LABEL, WARNING 1		1				
	8AC–77761–00	LABEL, WARNING 1			1			
9	83R–77741–00	INDICATOR 1	1	1	1			
10	98907–06016	SCREW, BIND	4	4	4			
11	90387–060U0	COLLAR	2	2	2			
12	83R–77144–00	NUT	2	2	2			
13	83R–77131–01	LOUVER 1	1	1	1			
14	83R–77132–01	LOUVER 2	1	1	1			
15	95802–06016	BOLT, FLANGE	2	2	2			
16	95702–06300	NUT, NYLON	2	2	2			
17	98707–04016	SCREW, FLAT HEAD	7	7	7			
18	90201–047A2	WASHER, PLATE	5	5	5			
19	95702–04300	NUT, FLANGE	5	5	5			
20	83R–77731–00	SHIELD 1	1	1	1			
21	90269–05055	RIVET	4	4	4			
22	83R–77712–00	PANEL, INSTRUMENT	1	1	1			
23	83R–77740–00	GROMMET, INSTRUMENT PANEL	1	1	1			
24	83R–77728–00	WASHER	1	1	1			
25	98907–05016	SCREW, BIND	2	2	2			

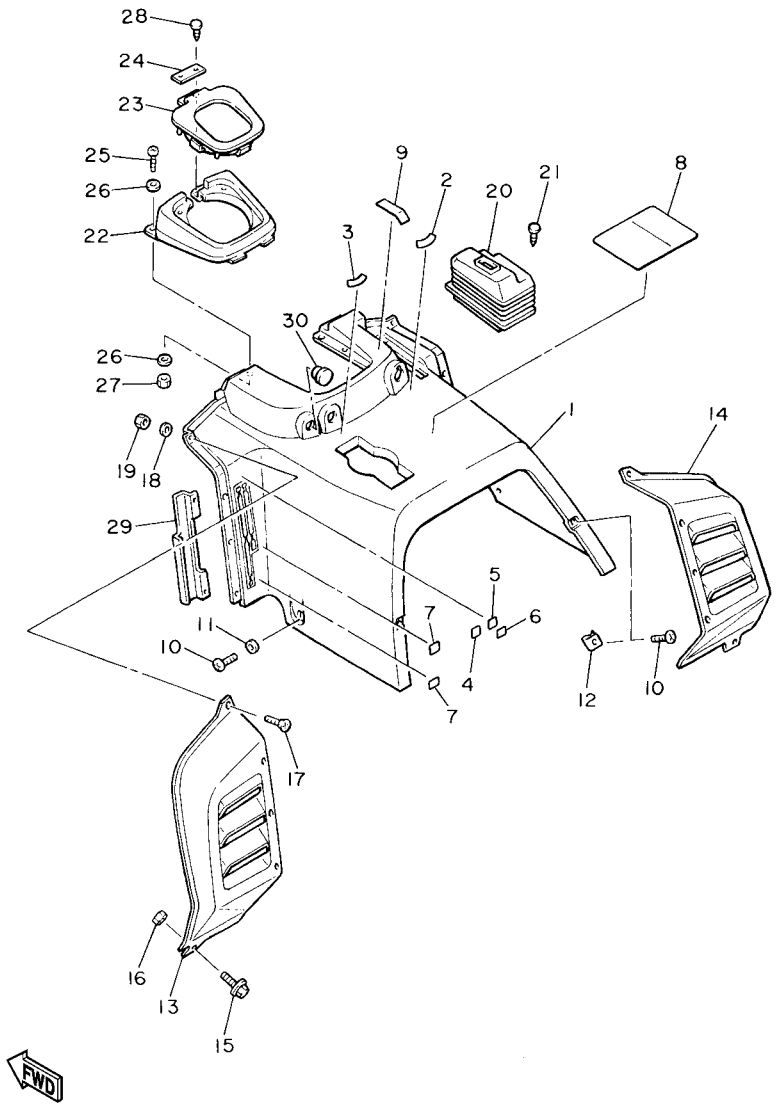

8JD1100-M340

FIG. 34 INSTRUMENT PANEL

REF. NO.	PART NO.	DESCRIPTION	EUR	RUS	JPN			REMARKS
26	90201–054K4	WASHER, PLATE	4	4	4			
27	95707–05300	NUT, FLANGE	2	2	2			
28	90269–05055	RIVET	2	2	2			
29	83R–2419A–00	HOLDER	1	1	1			
30	90480–12012	GROMMET	1	1	1			

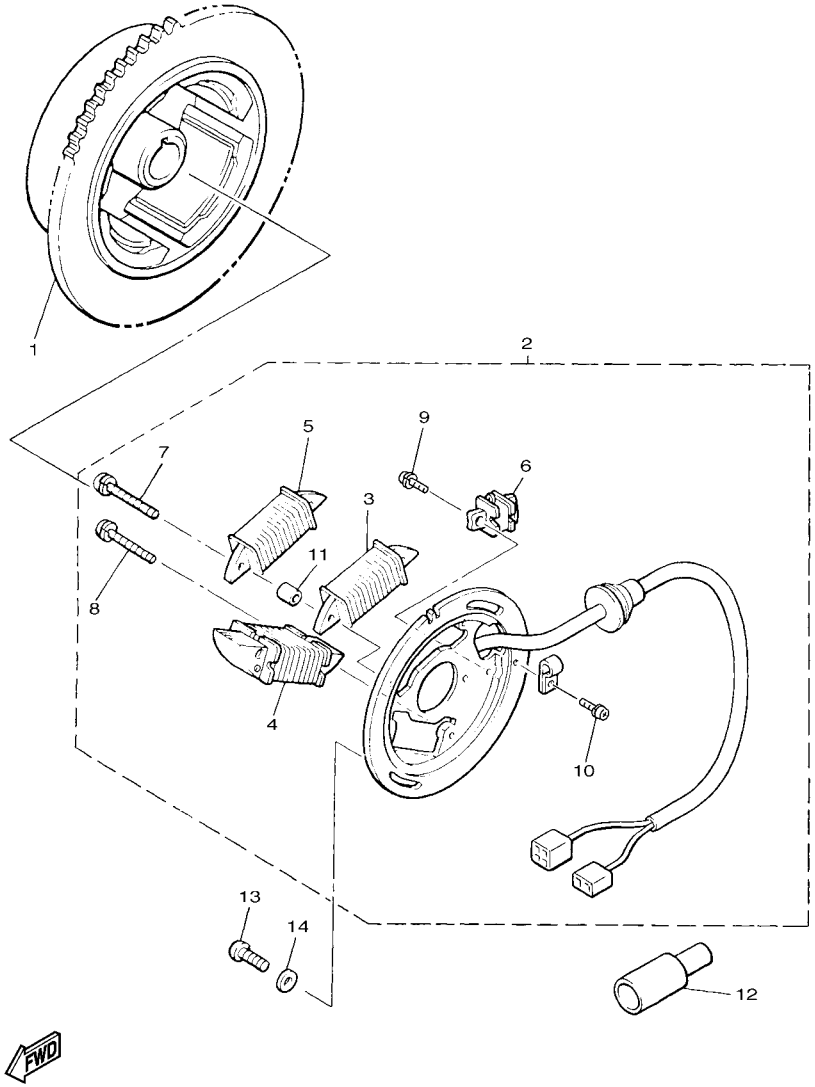

FIG. 35 GENERATOR

REF. NO.	PART NO.	DESCRIPTION	EUR	RUS	JPN			REMARKS
1	8AT–85550–01	ROTOR ASSY	1	1	1			
2	8AT–85560–10	BASE ASSY	1	1	1			
3	81L–85520–M0	.COIL, CHARGE	1	1	1			
4	81L–81313–M0	.COIL, LIGHTING 1	1	1	1			
5	81L–81314–M0	.COIL, LIGHTING 2	1	1	1			
6	8R4–85580–M0	.COIL, PULSER	1	1	1			
7	90159–05130	.SCREW, WITH WASHER	2	2	2			
8	90159–05129	.SCREW, WITH WASHER	2	2	2			
9	97607–04112	.SCREW, WITH WASHER	2	2	2			
10	97607–04108	.SCREW, WITH WASHER	1	1	1			
11	90387–06299	.COLLAR	2	2	2			
12	8Y0–82599–00	COVER, CONNECTER	1	1	1			
13	98907–06016	SCREW, BIND	2	2	2			
14	90201–06043	WASHER, PLATE	2	2	2			

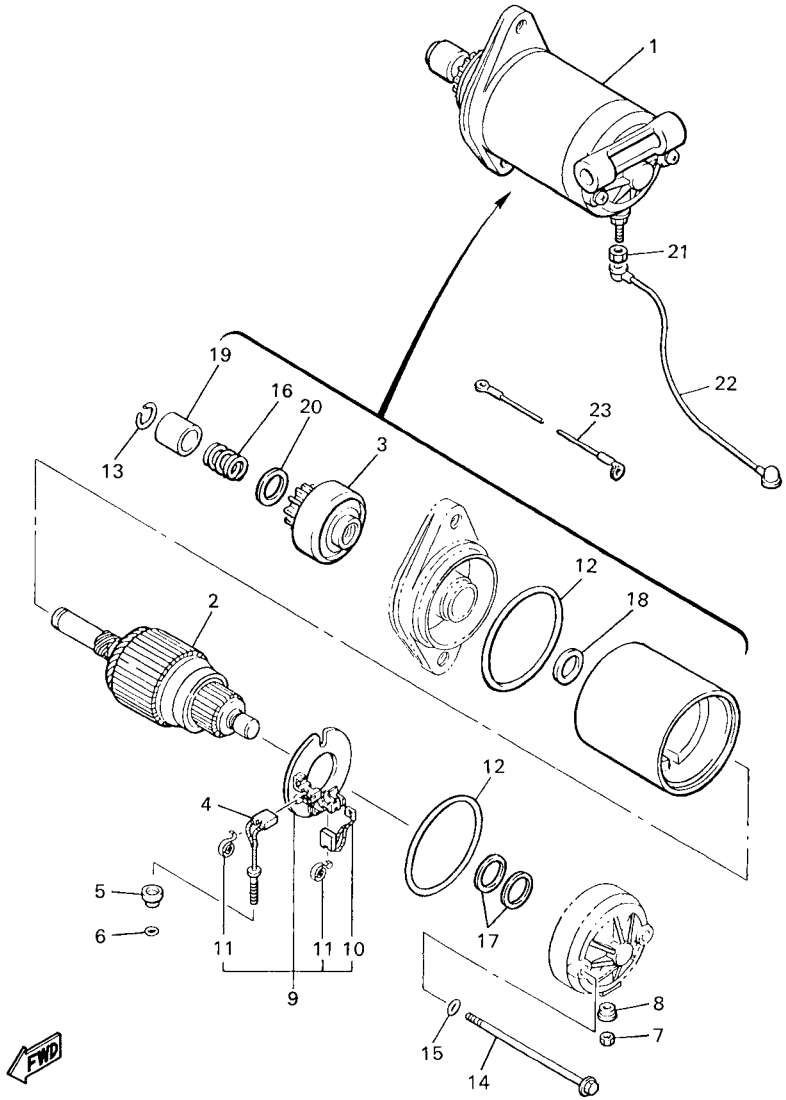

8AC6100-9360

FIG. 36 STARTING MOTOR

REF. NO.	PART NO.	DESCRIPTION	EUR	RUS	JPN			REMARKS
1	8BB–81800–01	STARTING MOTOR ASSY	1	1	1			
2	8Y3–81850–50	.ARMATURE ASSY	1	1	1			
3	84N–81832–51	.CLUTCH, OVER RUN	1	1	1			
4	73A–81811–00	.BRUSH 1	1	1	1			
5	73A–81829–50	.GROMMET	1	1	1			
6	73A–81847–00	.O-RING	1	1	1			
7	4H7–81872–00	.NUT, SPECIAL	1	1	1			
8	73A–81829–00	.GROMMET	1	1	1			
9	8L6–81840–50	.BRUSH HOLDER ASSY	1	1	1			
10	84N–81812–00	..BRUSH 2	1	1	1			
11	8L6–81813–50	..SPRING, BRUSH	2	2	2			
12	4H7–81844–50	.O-RING	2	2	2			
13	8L6–81834–50	.RING	1	1	1			
14	84N–81826–00	.BOLT	2	2	2			
15	8L6–81847–50	.O-RING	2	2	2			
16	8BB–81836–00	.SPRING, LEVER	1	1	1			
17	4H7–81843–50	.WASHER 1	2	2	2			
18	8L6–81835–50	.WASHER 2	1	1	1			
19	8L6–81833–50	.RING, STOP	1	1	1			
20	8BB–8185A–00	.WASHER, PLATE	1	1	1			
21	95307–06600	NUT	1	1	1			
22	83R–82117–01	WIRE, LEAD	1	1	1			
23	88N–82116–00	WIRE, MINUS LEAD	1	1	1			

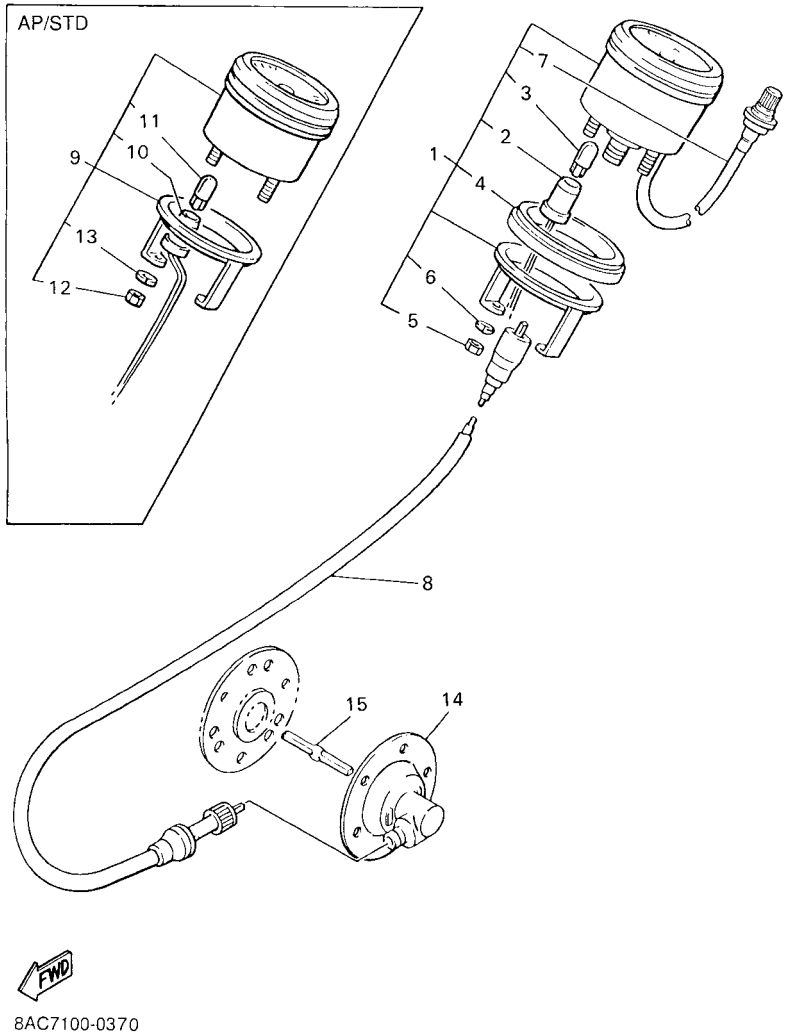

FIG. 37 METER

REF. NO.	PART NO.	DESCRIPTION	EUR	RUS	JPN			REMARKS
1	86V–83510–20	SPEEDOMETER ASSY (KM/H)	1	1	1			
2	8V7–83536–40	.SOCKET, METER	1	1	1			
3	4R0–83517–00	.BULB (12V-3.4W T10)	1	1	1			
4	8G6–83523–00	.DAMPER	1	1	1			
5	95302–05600	.NUT	2	2	2			
6	92902–05100	.WASHER, SPRING	2	2	2			
7	8K1–83603–00	.TRIP METER CABLE ASSY	1	1	1			
8	8H4–83560–00	METER CABLE ASSY	1	1	1			
9	85L–83540–00	TACHOMETER ASSY	1	1				AP
	85L–83540–00	TACHOMETER ASSY			1			STD
10	85L–83509–00	.SOCKET CORD ASSY	1	1				AP
	85L–83509–00	.SOCKET CORD ASSY			1			STD
11	4R0–83517–00	.BULB (12V-3.4W T10)	1	1				AP
	4R0–83517–00	.BULB (12V-3.4W T10)			1			STD
12	95380–05600	.NUT	4	4				AP
	95380–05600	.NUT			4			STD
13	92990–05100	.WASHER, SPRING	4	4				AP
	92990–05100	.WASHER, SPRING			4			STD
14	8JD–47700–00	METER GEAR HOUSING COMP.	1	1	1			
15	8K4–47715–00	JOINT	1	1	1			

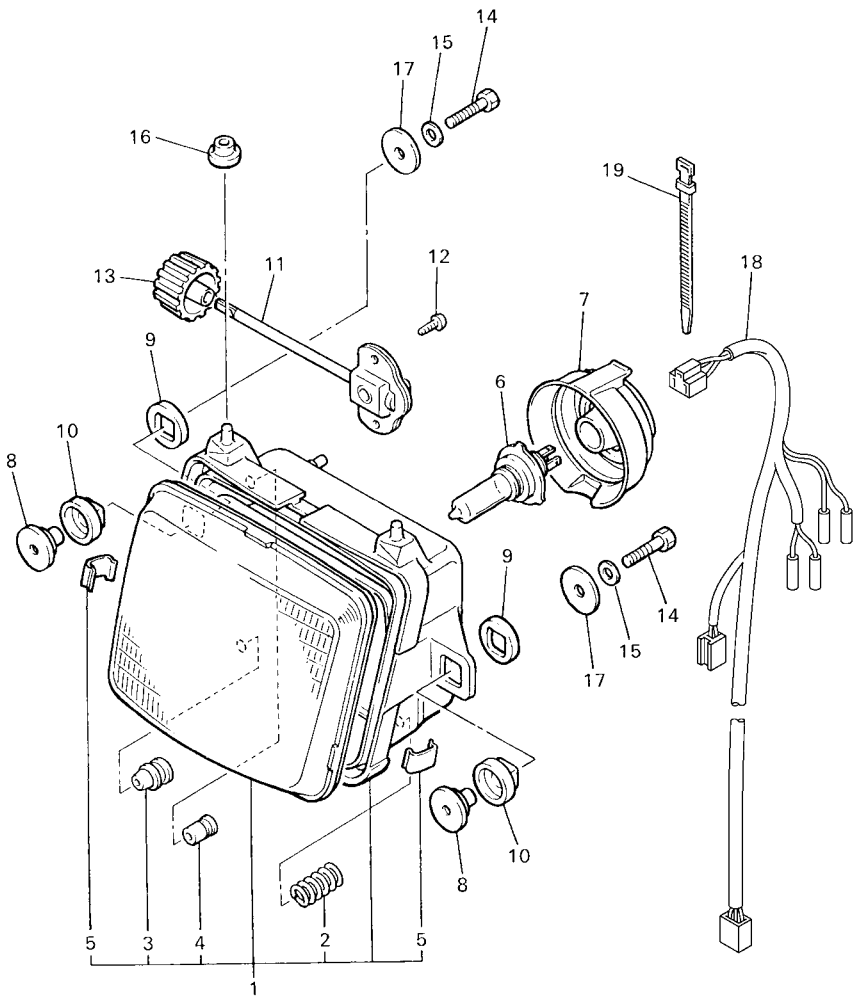

8JD1100-M380

FIG. 38 HEADLIGHT

REF. NO.	PART NO.	DESCRIPTION	EUR	RUS	JPN			REMARKS
1	83R–8430A–G0	HEAD LIGHT UNIT ASSY	1	1				
	84R–8430A–A0	HEAD LIGHT UNIT ASSY			1			
2	51L–84332–00	.SPRING, SCREW	1	1	1			
3	51L–8431U–00	.HOLDER	1	1	1			
4	51L–84334–00	.NUT, ADJUSTING	2	2	2			
5	36Y–84324–00	.SPRING, REFLECTOR	3	3	3			
6	2F9–84314–00	BULB (12V-60/55W)	1	1	1			(H4)HALOGEN
7	36Y–84397–00	COVER, SOCKET	1	1	1			
8	498–84145–60	COLLAR, BODY FITTING	2	2	2			
9	498–84164–60	DAMPER	2	2	2			
10	498–84163–60	DAMPER	2	2	2			
11	83R–8430M–00	GEAR UNIT ASSY	1	1	1			
12	97707–40616	SCREW, TAPPING	2	2	2			
13	26H–8432M–00	KNOB ASSY	1	1	1			
14	97007–08040	BOLT	2	2	2			
15	92907–08600	WASHER, PLATE	2	2	2			
16	36Y–84354–00	GROMMET	2	2	2			
17	90201–08766	WASHER, PLATE	2	2	2			
18	8JD–84359–00	CORD, HEADLIGHT	1	1	1			
19	437–83936–01	BAND, SWITCH CORD	1	1	1			

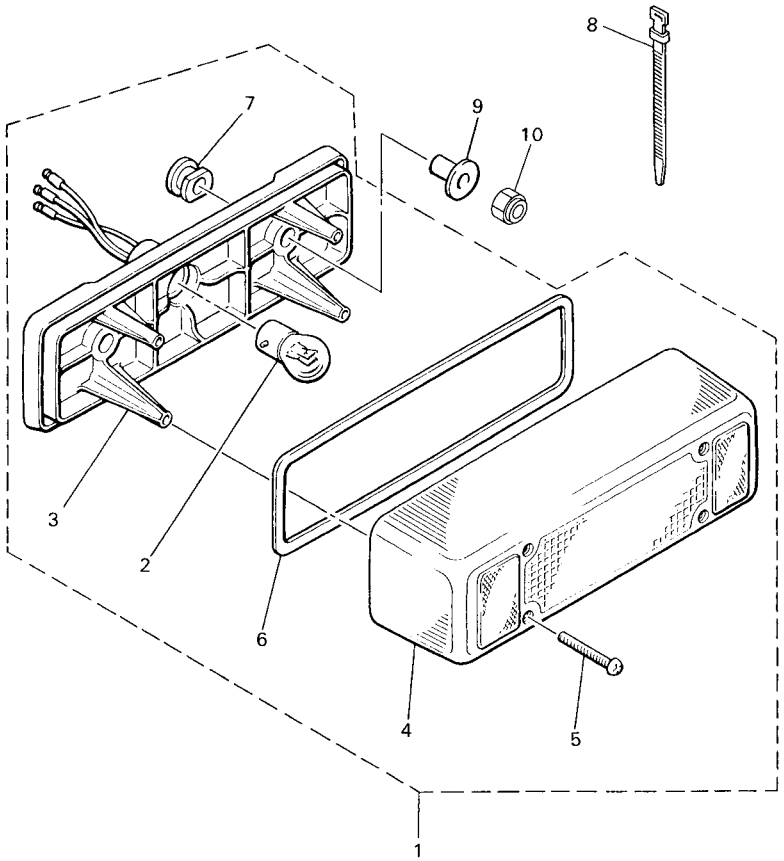

8JD1100-M390

FIG. 39 TAILLIGHT

REF. NO.	PART NO.	DESCRIPTION	EUR	RUS	JPN			REMARKS
1	8JN–84710–00	TAILLIGHT UNIT ASSY	1	1	1			
2	1A2–84714–41	.BULB (12V-21/5W)	1	1	1			
3	8K4–84711–01	.BASE, TAILLIGHT	1	1	1			
4	8K4–84733–01	.LENS, 1	1	1	1			
5	97701–40130	.SCREW, PANHEAD TAPPING	4	4	4			
6	87M–84723–00	.GASKET, TAIL LENS	1	1	1			
7	8K4–84718–00	.GROMMET	2	2	2			
8	90465–10098	CLAMP	1	1	1			
9	90387–066N1	COLLAR	2	2	2			
10	95602–06100	NUT, U	2	2	2			

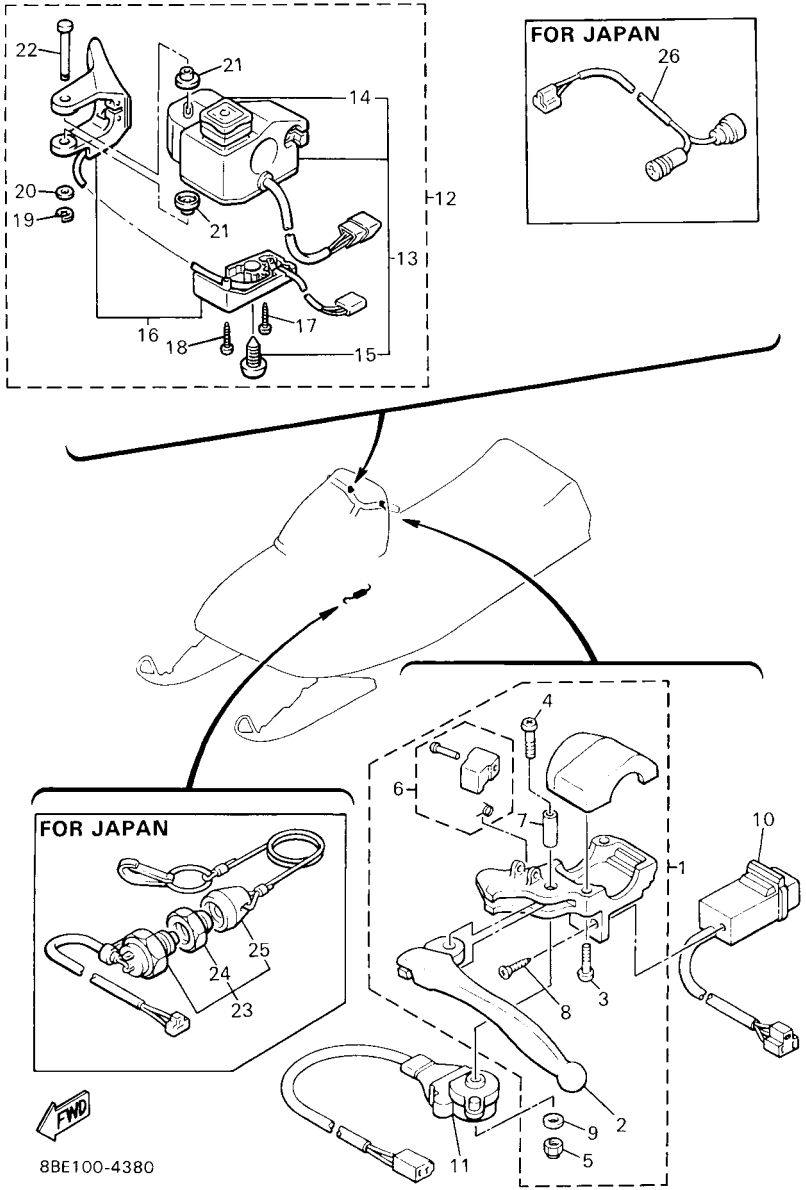

FIG. 40 HANDLE SWITCH & LEVER

REF. NO.	PART NO.	DESCRIPTION	EUR	RUS	JPN			REMARKS
1	88R–W8291–00	LEVER HOLDER ASSY (LEFT)	1	1	1			
2	8H8–83912–00	.LEVER 1	1	1	1			
3	90157–05027	.SCREW, PAN HEAD	2	2	2			
4	8R4–82113–00	.SCREW	1	1	1			
5	95702–05300	.NUT, NYLON	1	1	1			
6	8K4–W8393–00	.LEVER LOCK ASSY	1	1	1			
7	802–83913–00	.COLLAR, LEVER 1	1	1	1			
8	8R4–8252V–00	.SCREW, SPECIAL	1	1	1			
9	92902–05200	.WASHER	1	1	1			
10	8K4–83950–01	BEAM SWITCH ASSY	1	1	1			
11	88R–82530–00	STOP SWITCH ASSY	1	1	1			
12	8AU–82720–02	LEVER HOLDER ASSY (RIGHT)	1	1	1			
13	8AU–83963–00	.SWITCH, HANDLE 3	1	1	1			
14	8AU–82575–09	..ENGINE STOP SWITCH ASSY	1	1	1			WIRE/L=240MM
15	8R6–83928–00	..SCREW	1	1	1			
16	8AU–82970–02	.THUMB WARMER ASSY	1	1	1			
17	97706–30620	.SCREW, TAPPING	1	1	1			
18	97706–30630	.SCREW, TAPPING	1	1	1			
19	99001–04600	.CIRCLIP	1	1	1			
20	85G–83663–00	.WASHER, SPECIAL	1	1	1			
21	85G–83956–00	.CAP 1	2	2	2			
22	88T–8399F–00	.SHAFT	1	1	1			
23	8H8–82550–01	ENGINE STOP SWITCH ASSY			1			AP
24	8H8–82557–00	.NUT			1			AP
25	8H7–82552–01	.CAP, SWITCH			1			AP
26	89L–82318–00	WIRE, SUB-LEAD			1			AP

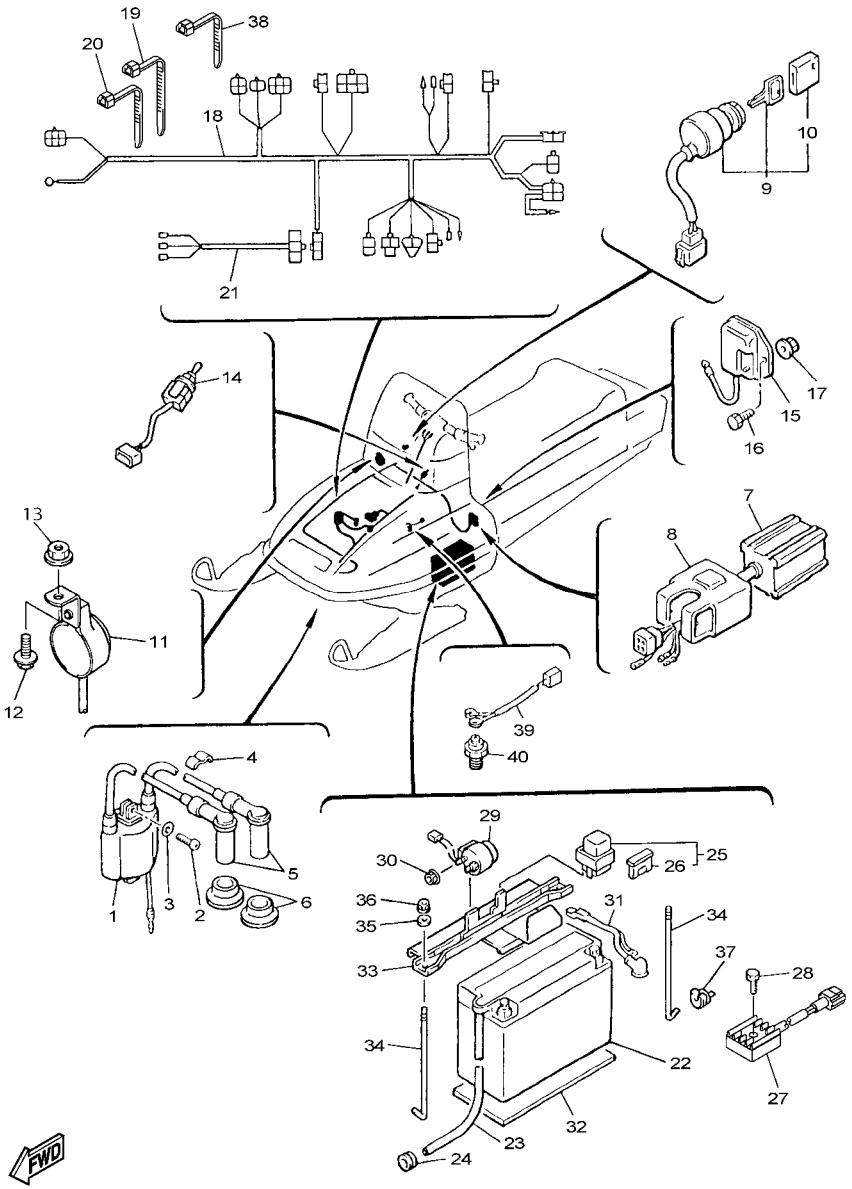

FIG. 41 ELECTRICAL 1

REF. NO.	PART NO.	DESCRIPTION	EUR	RUS	JPN			REMARKS
1	88T–82310–01	IGNITION COIL ASSY	1	1	1			
2	97880–06020	SCREW, PAN HEAD	2	2	2			
3	92990–06600	WASHER, PLATE	2	2	2			
4	861–82361–00	CLAMP, CORD	1	1	1			
5	8K1–82370–20	PLUG CAP ASSY (WITH RESISTOR)	2	2	2			
6	8G5–82372–00	SEAL, PLUG CAP	2	2	2			
7	8AU–85540–00	C.D.I. UNIT ASSY	1	1	1			
8	2A7–85546–00	BAND	1	1	1			
9	8K1–82510–20	MAIN SWITCH ASSY	1	1	1			
10	526–82579–00	.CAP, KEY	2	2	2			
11	87L–83383–01	BUZZER	1	1	1			
12	95822–06016	BOLT, FLANGE	1	1	1			
13	95602–06200	NUT, SELF-LOCKING	1	1	1			
14	8JD–82917–00	SWITCH	1	1	1			
15	82M–81910–A0	VOLTAGE REGULATOR ASSY	1	1	1			
16	97002–06014	BOLT	1	1	1			
17	95702–06300	NUT, NYLON	1	1	1			
18	8KA–82590–00	WIRE HARNESS ASSY	1	1	1			
19	90464–15195	CLAMP	1	1	1			
20	90464–13073	CLAMP	1	1	1			
21	8AC–84717–01	CORD, TAILLIGHT	1	1	1			
22	5E3–82110–81	BATTERY ASSY (YUASA YB16AL-A2)	1	1				
	90793–26072	BATTERY ASSY (YUASA YB16AL-A2)			1			
23	8AC–8235W–00	PIPE	1	1	1			
24	90480–12314	GROMMET	1	1	1			
25	8BE–82150–00	FUSE HOLDER ASSY	1	1	1			
26	42X–82151–00	.FUSE (10A-BL)	2	2	2			

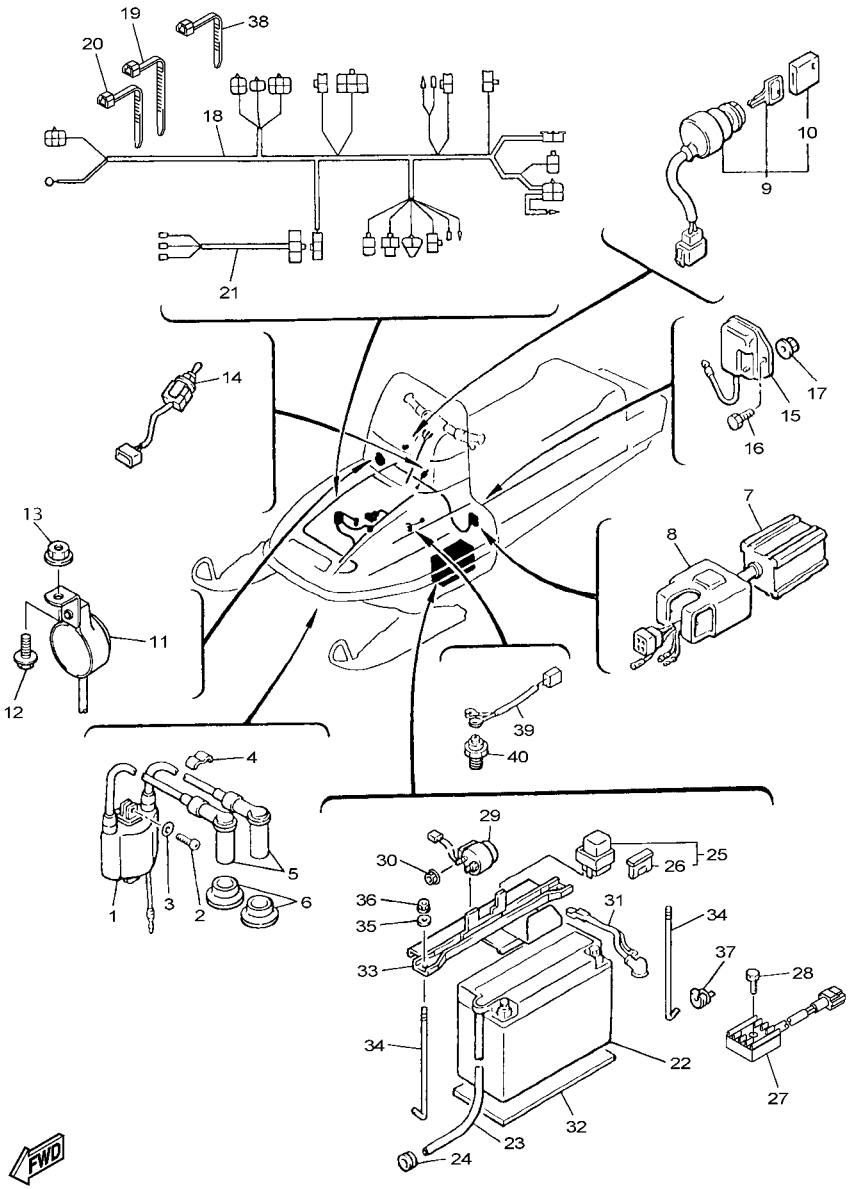

FIG. 41 ELECTRICAL 1

REF. NO.	PART NO.	DESCRIPTION	EUR	RUS	JPN			REMARKS
27	8AC–81970–00	RECTIFIER ASSY	1	1	1			
28	95802–06020	BOLT, FLANGE	1	1	1			
29	50W–81940–10	STARTER RELAY ASSY (MS5D-231)	1	1	1			
30	95702–06500	NUT, FLANGE	2	2	2			
31	88N–82115–00	WIRE, PLUS LEAD	1	1	1			
32	84N–82122–00	SEAT, BATTERY	1	1	1			
33	8AC–82136–10	PLATE, BATTERY FITTING	1	1	1			
34	8Y7–82133–00	SCREW, FITTING	2	2	2			
35	92902–06600	WASHER, PLATE	2	2	2			
36	95702–06300	NUT, NYLON	2	2	2			
37	8AC–82355–00	GROMMET	1	1	1			
38	90464–13077	CLAMP	2	2	2			
39	87L–82318–00	WIRE, SUB-LEAD	1	1	1			
40	4KD–82540–00	NEUTRAL SWITCH ASSY	1	1	1			

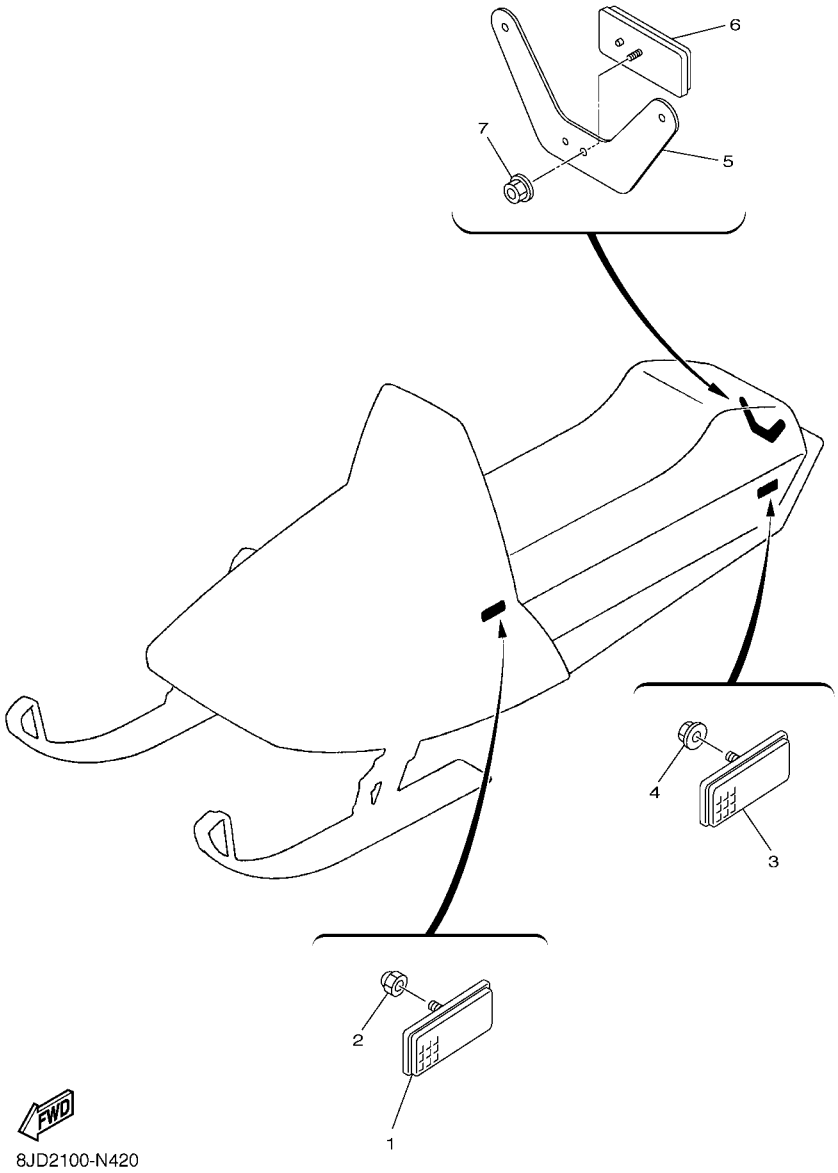

FIG. 42 ELECTRICAL 2

REF. NO.	PART NO.	DESCRIPTION	EUR	RUS	JPN			REMARKS
1	8GM–85110–00	REFLECTOR ASSY	2	2	2			
2	95602–05200	NUT, SELF-LOCKING	2	2	2			
3	8GM–85110–00	REFLECTOR ASSY	2	2	2			
4	95702–05500	NUT, FLANGE	2	2	2			
5	8JN–83955–00	BRACKET 1	1	1	1			
6	3Y6–85130–02	REAR REFLECTOR ASSY	1	1	1			
7	95702–05500	NUT, FLANGE	1	1	1			

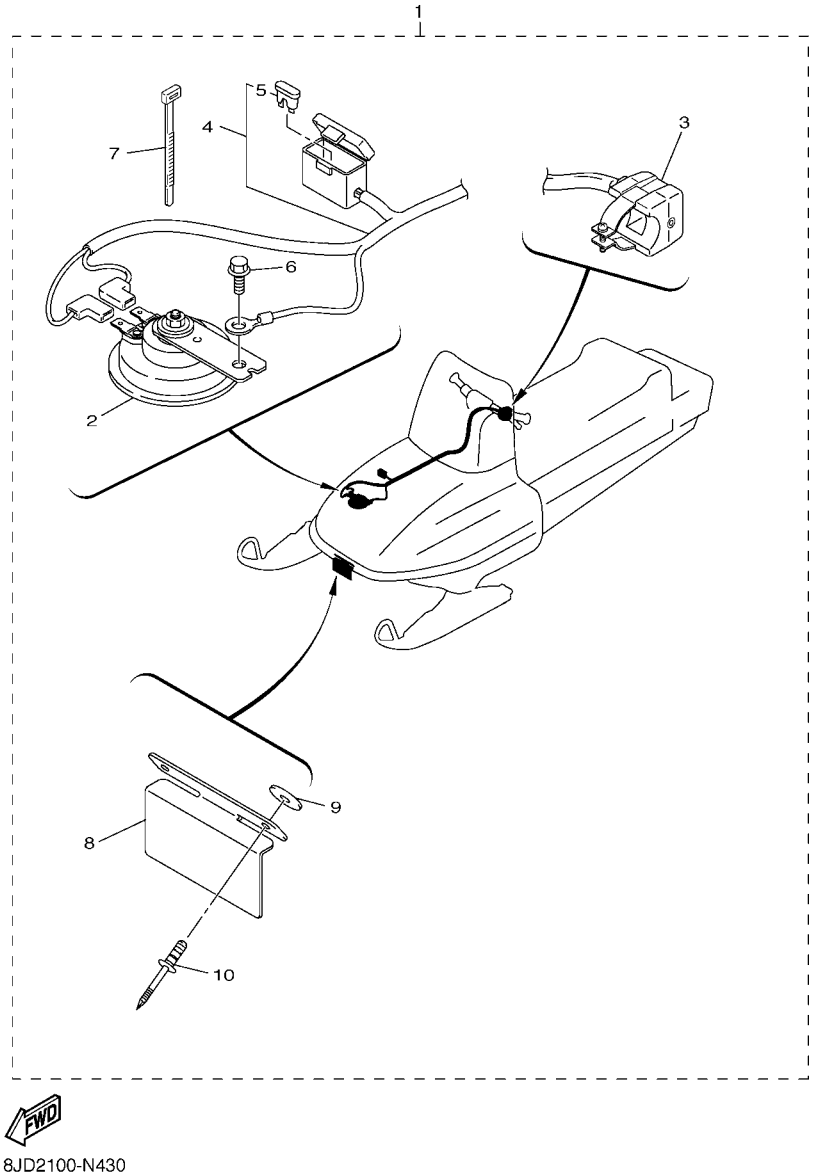

FIG. 43 ELECTRICAL 3

REF. NO.	PART NO.	DESCRIPTION	EUR	RUS	JPN			REMARKS
1	8JD–833A0–00	HORN KIT	1					FOR FINLAND
2	3MX–83371–11	.HORN	1					FOR FINLAND
3	8FR–83976–02	.SWITCH, HANDLE 1	1					FOR FINLAND
4	8AC–82509–10	.WIRE, SUB LEAD	1					FOR FINLAND
5	5JJ–82151–50	..FUSE (3A-BL)	1					FOR FINLAND
6	95822–06016	.BOLT, FLANGE	1					FOR FINLAND
7	437–83936–01	.BAND, SWITCH CORD	1					FOR FINLAND
8	8GU–21641–00	.BRACKET, REFLECTOR	1					FOR FINLAND
9	90201–05036	.WASHER, PLATE	2					FOR FINLAND
10	90267–47186	.RIVET, BLIND (4.7X16.4 BLACK)	2					FOR FINLAND

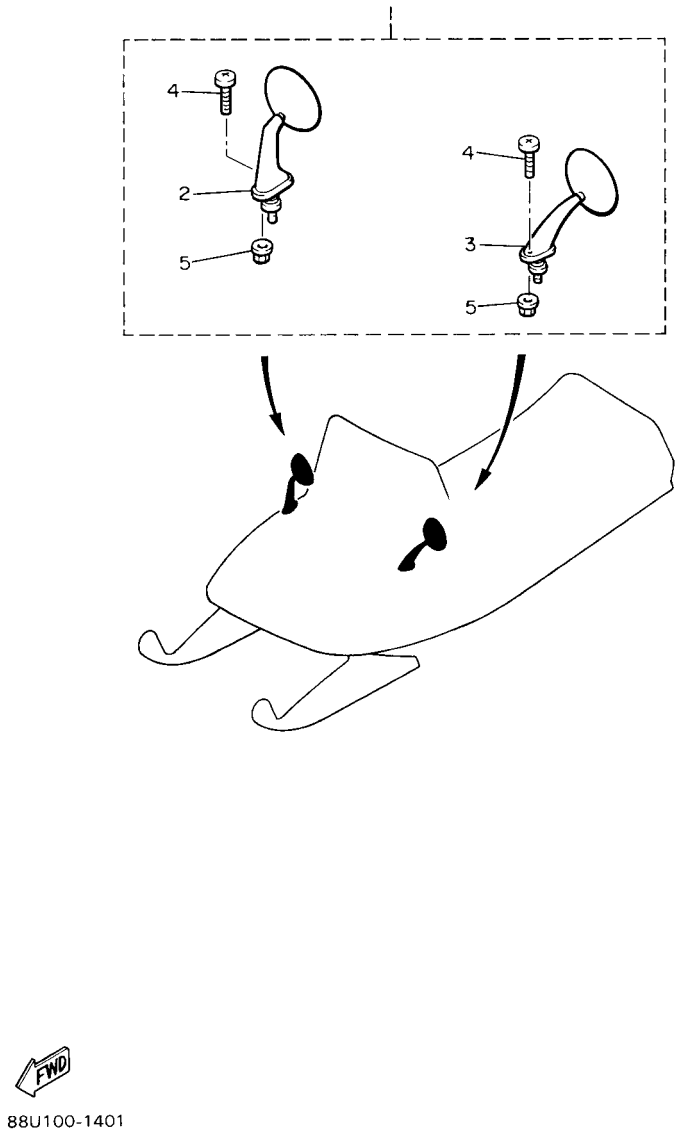

FIG. 44 ALTERNATE REAR VIEW MIRROR

REF. NO.	PART NO.	DESCRIPTION	EUR	RUS	JPN			REMARKS
1	8E1–W2628–00	REAR VIEW MIRROR SET	1	1	1			AP
2	8E1–26280–00	.REAR VIEW MIRROR ASSY (RIGHT)	1	1	1			
3	8E1–26290–00	.REAR VIEW MIRROR ASSY (LEFT)	1	1	1			
4	98507–04016	.SCREW, PAN HEAD	4	4	4			
5	95707–04500	.NUT, FLANGE	4	4	4			

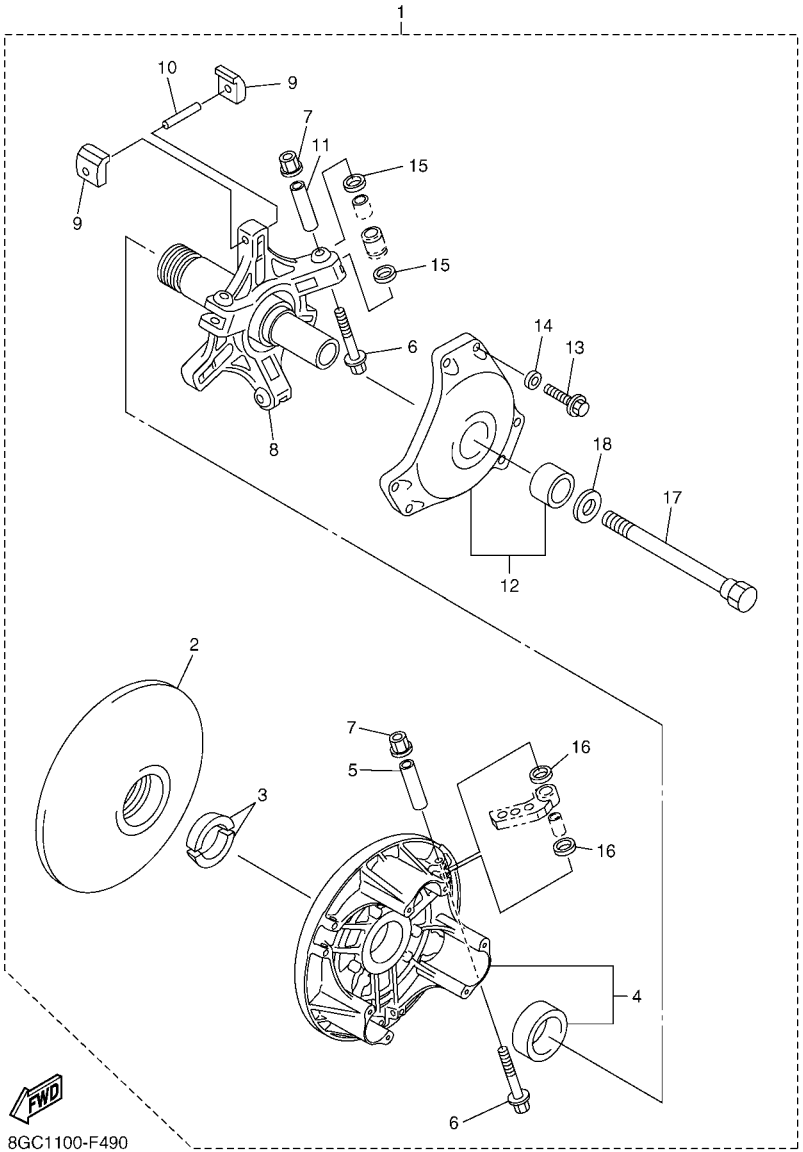

FIG. 45 ALTERNATE REBUILD KIT

REF. NO.	PART NO.	DESCRIPTION	EUR	RUS	JPN			REMARKS
1	8GJ–W176G–02	CLUTCH REPAIR KIT	1	1	1			AP
2	8FA–17611–01	.SHEAVE, PRIMARY FIXED	1	1	1			
3	8V0–17639–00	.STOPPER	2	2	2			
4	8BV–17620–03	.PRIMARY SLIDING SHEAVE COMP.	1	1	1			
5	90387–0514T	.COLLAR	3	3	3			
6	90105–05644	.BOLT, FLANGE	6	6	6			
7	95607–05200	.NUT, U FLANGE	6	6	6			
8	8ES–17640–02	.SPIDER COMPLETE	1	1	1			
9	8BW–17653–00	.SLIDER	6	6	6			
10	91609–50032	.PIN, SPRING	3	3	3			
11	90387–0514U	.COLLAR	3	3	3			
12	8BV–17630–11	.PRIMARY SHEAVE CAP COMP.	1	1	1			
13	97017–06030	.BOLT	6	6	6			
14	92907–06600	.WASHER, PLATE	6	6	6			
15	90202–09227	.WASHER, PLATE	6	6	6			
16	90202–08204	.WASHER, PLATE	6	6	6			
17	8V0–17647–00	.BOLT (L=156.5MM)	1	1	1			
18	92907–16100	.WASHER	1	1	1			

FIG. 46 ALTERNATE CLUTCH TUNE UP KIT

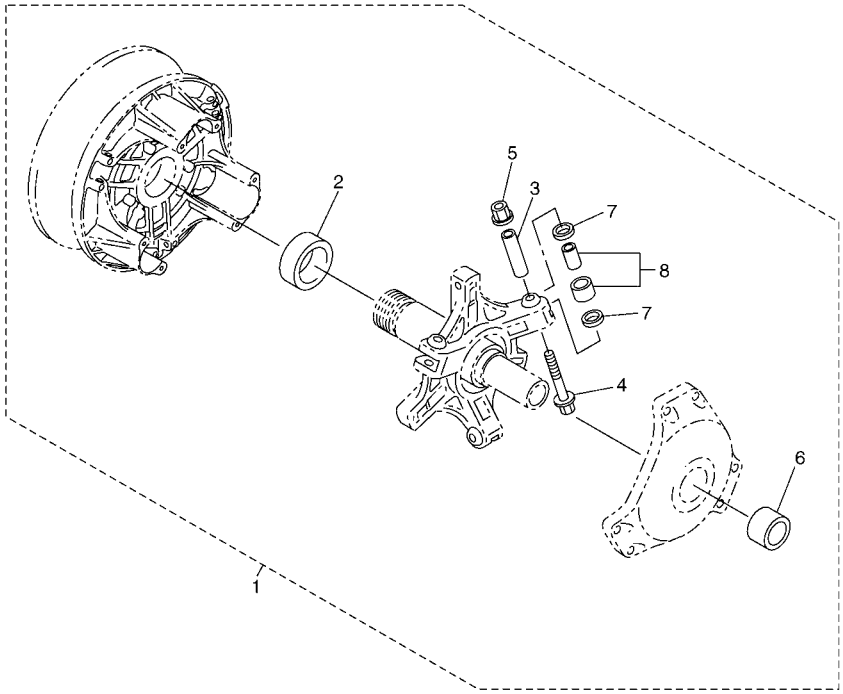

8FA1100-B550

REF. NO.	PART NO.	DESCRIPTION	EUR	RUS	JPN			REMARKS
1	8ET–W176H–00	CLUTCH TUNE-UP KIT	1	1	1			AP
2	90384–41242	.BUSH, BIMETAL FORMED	1	1	1			
3	90387–0514U	.COLLAR	3	3	3			
4	90105–05644	.BOLT, FLANGE	3	3	3			
5	95607–05200	.NUT, U FLANGE	3	3	3			
6	90380–28237	.BUSH, SOLID	1	1	1			
7	90202–09227	.WASHER, PLATE	6	6	6			
8	8FG–17624–00	.ROLLER, COMP	3	3	3			

PART NO.	REF. NO.
8R6–11111–00	1 – 1
J38–11116–00	9 – 7
83R–11161–00	1 – 3
83R–11162–00	1 – 10
83R–11181–00	1 – 4
83R–11311–00	1 – 9
89N–11351–00	1 – 12
8AT–11400–01	2 – 6
83R–11412–01	2 – 7
8H8–11422–01	2 – 8
8H8–11432–01	2 – 9
8AT–11442–00	2 – 10
8H8–11515–00	2 – 14
8R6–11601–00	2 – 2
8R6–11601–10	2 – 2
8R6–11601–20	2 – 2
8R6–11631–00–95	2 – 1
8H8–11633–00	2 – 3
8R6–11635–00	2 – 1
8R6–11636–00	2 – 1
8R6–11651–00	2 – 12
8A7–11685–00	2 – 23
8H8–12611–01	3 – 14
8H8–12612–00	3 – 21
8L0–12616–00	3 – 34
8H8–12618–01	3 – 22
8H8–12619–01	3 – 16
88F–12621–02	3 – 1
8AC–1262A–E0	3 – 40
8AC–1262A–R1	3 – 40
8Y0–12637–02	3 – 35
8H8–12651–02	3 – 23
8H8–12652–00	3 – 33
8H8–12658–00	3 – 25
8Y0–12658–00	3 – 3
8H8–12659–00	3 – 26
8H8–12669–00	3 – 27
8V8–12678–00	3 – 28
8AT–12679–00	3 – 30
8Y0–12679–00	3 – 2
8Y0–12687–02	3 – 36
8AT–13101–00	4 – 1
8Y0–13116–01	4 – 17
8K4–13119–00	5 – 18
137–13137–00	4 – 11
137–13138–01	4 – 10
8A5–13146–01	4 – 19
137–13148–00	5 – 7

PART NO.	REF. NO.
866–13175–00	5 – 4
821–13176–00	5 – 3
8K2–13178–00	2 – 22
8H8–13179–00	5 – 14
821–13188–00	5 – 5
8G8–13342–00	5 – 16
8G8–13410–00	14 – 7
353–13552–01	4 – 6
8G8–13555–01	6 – 12
8Y7–13556–01	6 – 6
83R–13565–00	6 – 7
8AT–13610–00	6 – 1
8AT–13613–00	6 – 2
8H8–13616–00	6 – 3
84R–14101–03	7 – 1
86R–14101–03	7 – 1
22F–14117–00	7 – 21
8V0–14118–00	7 – 17
80L–14122–00	7 – 18
127–14124–20	7 – 26
89A–14125–00	7 – 18
8M6–14126–00	7 – 4
2J2–14133–00	7 – 19
8X0–14133–00	7 – 28
82A–14134–00	7 – 2
127–14135–00	7 – 14
193–14142–90	7 – 16
3G2–1414E–56	7 – 12
193–1414F–00	7 – 16
802–14161–00	7 – 27
8A7–14169–00	7 – 24
8G8–14171–00	7 – 15
8G8–14174–00	7 – 13
8U9–14174–00	7 – 13
8JD–1417E–00	32 – 5
8X0–14184–00	7 – 20
8M6–14185–00	7 – 10
68V–14186–00	7 – 9
8M6–14186–00	7 – 9
83R–14190–15	7 – 8
214–14195–00	7 – 7
286–14198–00	7 – 6
620–14211–00	7 – 3
3DM–14216–00	7 – 31
80L–14227–00	7 – 25
3G2–14231–27	7 – 12
3G2–14231–28	7 – 12
3G2–14231–77	7 – 12

PART NO.	REF. NO.
3G2–14231–78	7 – 12
3G2–14231–79	7 – 12
8M6–14261–00	7 – 5
89A–14265–00	7 – 20
8X0–14358–00	7 – 23
83R–14425–00	6 – 29
8H8–14431–00	6 – 19
8H8–14441–00	6 – 20
83R–14453–00	6 – 16
83R–14465–00	6 – 21
8H8–14466–00	6 – 22
8H8–14477–00	6 – 23
8X0–14500–00	7 – 19
8K4–14610–00	8 – 1
82M–14613–01	8 – 2
83R–14710–04	8 – 5
83R–14728–01	8 – 6
83R–14941–4E	7 – 11
1UF–14952–00	7 – 22
256–14956–01	7 – 30
8H8–15100–02	9 – 1
3Y1–15363–10	28 – 20
8AT–15416–00	5 – 1
8K4–15426–00	5 – 10
8H8–15710–00	10 – 1
8H8–15711–00	10 – 2
8F3–15713–01	10 – 5
8F3–15714–01	10 – 3
8F3–15715–00	10 – 6
8G5–15716–00	10 – 15
8F3–15716–03	10 – 9
8H8–15723–01	10 – 18
8F3–15734–00	10 – 8
8G5–15739–00	10 – 12
8F3–15739–01	10 – 7
8F3–15741–01	10 – 4
8F3–15751–00	10 – 13
8F3–15755–00	10 – 14
83R–17121–00	27 – 6
8AT–17131–00	27 – 11
8AT–17141–00	27 – 19
83R–17143–00	27 – 26
83R–17151–00	27 – 20
83R–17153–00	27 – 36
83R–17243–00	27 – 35
85R–17421–00	27 – 2
83R–17431–00	27 – 17
83R–17432–01	27 – 31

PART NO.	REF. NO.
83R–17492–10	27 – 10
	27 – 25
8AT–17605–10	11 – 22
8FA–17611–01	11 – 1
	45 – 2
8BV–17620–03	11 – 3
	45 – 4
8FG–17624–00	11 – 19
	46 – 8
8BV–17630–11	11 – 14
	45 – 12
8V0–17639–00	11 – 2
	45 – 3
8ES–17640–02	11 – 8
	45 – 8
8DN–17641–01	11 – 26
8V0–17647–00	11 – 27
	45 – 17
8BW–17653–00	11 – 9
	45 – 9
88R–17660–03	12 – 1
8AT–17670–01	12 – 2
88N–17680–02	12 – 11
8KA–17682–00	27 – 12
8AT–17684–01	12 – 9
8X6–17688–00	12 – 3
52G–18113–00	28 – 25
83R–18116–00	28 – 44
89N–18130–01	28 – 10
83R–18150–00	28 – 24
83R–18153–00	28 – 30
3X3–18156–10	28 – 45
3X3–18157–10	28 – 40
83R–1815A–00	28 – 26
59V–18174–00	28 – 27
83R–18341–00	28 – 31
59V–18433–00	28 – 37
83R–18511–00	27 – 37
83R–18531–00	27 – 38
89N–18540–00	28 – 2
59V–18561–00	28 – 29
8H8–21411–01	13 – 1
8AT–21417–00	13 – 15
8H8–21418–01	13 – 16
83R–21419–01	13 – 2
8H8–21427–00	13 – 17
8H8–21429–01	13 – 3
8V9–21485–00	13 – 5

PART NO.	REF. NO.
8N7–21486–00	13 – 4
8V9–21486–00	13 – 6
8GU–21641–00	43 – 8
8AT–21747–00	14 – 22
83R–21751–00	14 – 1
863–21771–00	14 – 4
8JD–21912–01	15 – 6
89X–21917–00	15 – 30
8JD–21926–00	15 – 70
8AC–21933–00	15 – 68
81E–21945–00	15 – 2
8AT–2194Y–00	15 – 27
83R–21955–00	15 – 4
8AT–2195Y–00	15 – 28
8AC–21965–00	15 – 10
8AT–2196T–00	15 – 64
8JD–2196T–00	15 – 65
83R–21986–00	15 – 7
83R–21987–00	15 – 8
83R–2198F–00	15 – 5
8M6–2198F–00	15 – 24
8CR–2198J–00	15 – 43
8M6–21998–00	15 – 25
8AT–2199G–01	15 – 56
8AT–2199H–00	29 – 67
8KA–22401–00	16 – 23
89L–22493–00	16 – 26
4XV–2341B–00	31 – 8
8AC–23711–00	16 – 1
8JD–23711–00	16 – 12
8DM–23712–00	16 – 3
8JD–23731–00	16 – 14
8EN–23731–01	16 – 8
8HG–23737–00	16 – 6
88T–23743–00	16 – 17
8AC–23754–00	16 – 2
8JD–23754–00	16 – 13
8HG–23755–00	16 – 4
8HG–23756–00	16 – 5
8AC–23765–00	16 – 16
83R–23768–00	25 – 2
84M–2376E–00	16 – 54
8AT–2376J–00	16 – 32
8L0–2376R–00	16 – 33
8KA–23777–00	16 – 24
8HG–23778–00	16 – 7
82M–23779–00	16 – 29
84M–2377E–00	16 – 55

PART NO.	REF. NO.
8L0–23788–00	16 – 27
8AU–23811–11	17 – 1
8F3–23812–00	17 – 9
8KA–23813–00	17 – 2
8K1–23814–00	17 – 5
8G5–23814–01	17 – 4
8KA–23815–00	17 – 13
8AT–23818–00	15 – 21
8KA–2381B–00	17 – 3
8AT–23821–00	17 – 14
8L0–2382E–01	16 – 43
8L0–2382F–00	16 – 44
8AT–23831–00	17 – 19
86X–23841–00	17 – 15
87S–23845–01	17 – 20
87S–23847–01	17 – 16
	17 – 21
82M–23851–00	16 – 35
8AT–23852–00	16 – 36
8JN–23857–00	17 – 6
8V0–23858–00	19 – 30
84M–23868–00	17 – 8
83R–23870–00	18 – 1
8AT–23883–01	15 – 36
8AT–23884–01	15 – 37
8AC–23894–01	17 – 10
83R–24111–00	19 – 1
8AC–2414B–01	30 – 4
83R–2419A–00	34 – 29
84M–24327–00	14 – 14
	19 – 32
81E–24328–00	19 – 29
83R–24335–00	19 – 13
813–24336–00	19 – 17
801–24376–00	14 – 6
82M–24376–00	19 – 19
878–24379–00	19 – 33
8AT–24410–00	6 – 30
89A–24529–00	7 – 28
8H5–24560–00	19 – 15
8W6–24611–00	19 – 2
813–24613–01	19 – 3
83M–24628–00	19 – 8
8F7–24641–00	19 – 4
8AC–2470F–00	20 – 2
85R–2471A–00	15 – 62
83R–24729–00	20 – 3
8AC–24730–01	20 – 1

PART NO.	REF. NO.
8AT–24778–00	20 – 5
8AC–24790–10	20 – 7
4KN–24877–C0	33 – 15
8FM–24897–11	33 – 15
87R–25721–00	21 – 10
87R–25722–00	21 – 13
87R–25726–01	21 – 4
87R–25730–01	21 – 2
86M–25733–00	21 – 14
86M–25738–00	21 – 3
87R–25743–00	21 – 12
86M–25744–00	21 – 16
86M–25771–00	21 – 7
86M–25772–00	21 – 8
86M–25773–00	21 – 6
89J–25811–00	21 – 18
86M–25818–00	21 – 9
86M–25826–00	21 – 11
86M–25827–00	21 – 5
83R–25831–00	21 – 1
86M–25833–00	21 – 15
89J–25911–00	21 – 19
8DX–26240–01	22 – 8
8E1–26280–00	44 – 2
8E1–26290–00	44 – 3
8KA–26311–00	22 – 1
8L8–26320–04	4 – 21
8U9–26325–00	22 – 6
83R–26331–01	22 – 4
8G8–26333–00	22 – 5
8KA–26340–00	22 – 3
85R–2639F–00	15 – 63
85L–28100–00	15 – 72
4B5–2815K–20	31 – 6
8AC–2815P–J0	29 – 63
8AC–2815P–S0	29 – 63
8HF–2817S–00	33 – 28
8GS–2817S–J0	33 – 28
8JD–47110–01	23 – 14
8HR–47113–09	23 – 15
8HR–47115–09	23 – 16
8KA–47310–00	23 – 28
	23 – 36
8HP–47310–10	23 – 51
8GP–47319–00	23 – 44
8AC–47320–00	23 – 41
8KA–47331–00	24 – 1
8KA–47332–00	24 – 41

PART NO.	REF. NO.
8KA–47333–00	25 – 11
83R–47335–00	25 – 3
83R–47337–10	25 – 1
8KA–47341–00	24 – 4
8KA–47349–00	24 – 25
8JD–47365–00	23 – 18
8KA–47416–00	24 – 28
8JD–47417–00	24 – 57
8GP–47419–00	23 – 47
8ES–47419–10	23 – 33
8ES–47419–20	23 – 27
8KA–4741A–00	23 – 1
8JD–47421–01	23 – 2
8GL–47422–00	23 – 4
8GL–47445–00	24 – 50
8ET–47446–00	23 – 34
8KA–47446–00	25 – 4
8ES–47447–00	24 – 42
8KA–47448–00	24 – 44
8ES–47456–00	23 – 7
8AC–47457–00	23 – 10
8AX–47458–00	23 – 12
8K2–47458–01	23 – 8
8KA–47465–00	24 – 2
8ES–47467–00	24 – 54
83R–47469–10	23 – 50
8KA–47473–00	24 – 51
8KA–47474–00	24 – 52
8KA–47475–00	24 – 49
8DM–47479–00	23 – 61
8KA–47480–00	24 – 32
8KA–47481–00	24 – 19
8KE–47481–00	24 – 19
83R–47485–02	24 – 10
	24 – 58
	25 – 13
8JD–47486–00	24 – 6
8JD–47488–00	24 – 55
8KA–47494–00	24 – 34
8HR–47495–00	24 – 15
8JH–47496–00	23 – 22
8KE–47496–00	23 – 22
8JN–47520–00	23 – 49
	23 – 55
8JD–47531–00	26 – 3
8JD–47532–00	26 – 4
87R–47541–00	28 – 1
83R–47543–00	27 – 1

PART NO.	REF. NO.
85R–47544–01	28 – 17
8KA–47548–00	27 – 49
8AC–47550–00	23 – 17
8KA–47550–00	23 – 59
83R–47551–00	26 – 5
83R–47571–00	28 – 13
8KA–47573–00	23 – 11
8K4–47577–00	26 – 2
8JD–47578–00	28 – 47
88N–47591–00	28 – 18
85R–47592–00	28 – 22
8FA–47612–00	27 – 42
83R–47613–00	27 – 39
88N–47631–00	12 – 12
8JD–47700–00	37 – 14
8K4–47715–00	37 – 15
8AC–77111–B0–P2	29 – 1
8AC–77111–B0–P5	29 – 1
83R–77118–01	29 – 61
8AC–7711A–50	30 – 2
8AC–7711A–70	30 – 2
8AC–7711B–50	30 – 3
8AC–7711B–70	30 – 3
8AT–77121–00	29 – 16
8AT–77122–00	29 – 17
83R–77125–00	29 – 25
8AT–77125–00	29 – 9
83R–77131–01	34 – 13
83R–77132–01	34 – 14
83R–77140–01	29 – 20
83R–77144–00	29 – 42
	34 – 12
83R–7714A–01	29 – 21
8AT–77153–00	29 – 12
8AT–77154–00	29 – 13
838–77159–00	29 – 62
8JE–7715A–00	30 – 5
8CR–77165–00	15 – 50
8JN–77171–00	29 – 56
8M6–77175–00	15 – 39
83R–7717E–00	15 – 53
8JD–7717E–00	29 – 33
83R–7717F–00	15 – 54
8JD–7717F–00	29 – 34
83R–77185–00	29 – 24
83R–77186–00	29 – 38
83R–77194–00	29 – 32
8AT–77196–00	29 – 68

PART NO.	REF. NO.
8JN–77196–00	29 – 69
86V–77210–10	31 – 1
83R–77212–00	29 – 47
87S–77213–10	31 – 2
8AC–77231–40	29 – 46
8AC–77231–80	29 – 46
83R–77241–00	29 – 43
86V–77251–01	29 – 50
87R–77251–01	29 – 50
8AT–77261–00	29 – 3
8AT–77264–00	29 – 5
8AT–77265–00	29 – 6
8AT–77266–00	29 – 7
8AT–77267–00	29 – 8
8JD–77268–00	29 – 4
8AT–77271–00	15 – 46
8JD–77272–01	15 – 42
8AT–77273–10	15 – 47
8AT–77274–00	15 – 48
8AT–77275–00	15 – 49
8AT–77311–00	32 – 1
8AT–77319–00	32 – 4
83R–77327–00	32 – 2
86V–77384–00	20 – 4
8JN–77511–00	33 – 1
8JN–77513–00	33 – 2
83R–77515–00	29 – 35
8AT–77526–00	15 – 22
8AT–77527–02	15 – 19
8JD–77531–00	33 – 17
8JD–77532–00	33 – 18
8AC–77540–00	33 – 6
8JD–77571–00	33 – 16
8JD–77577–00	15 – 20
8JN–77588–00	29 – 70
80M–77591–00	33 – 24
84R–77592–00	33 – 12
83R–77595–00	33 – 21
86V–77711–00	34 – 1
83R–77712–00	34 – 22
83R–77728–00	34 – 24
83R–77731–00	34 – 20
83R–77740–00	34 – 23
83R–77741–00	34 – 9
87A–77741–00	34 – 6
8V0–77741–20	34 – 2
87A–77742–00	34 – 5
8U9–77742–00	34 – 3

PART NO.	REF. NO.
87A–77743–00	34 – 4
87A–77745–00	34 – 7
8AC–77761–00	34 – 8
8AC–77761–10	34 – 8
8AC–77761–R1	34 – 8
86D–77762–00	32 – 3
8BD–77762–21	32 – 3
8AC–77762–R1	32 – 3
8JN–77764–R0	29 – 71
81L–81313–M0	35 – 4
81L–81314–M0	35 – 5
8BB–81800–01	36 – 1
73A–81811–00	36 – 4
84N–81812–00	36 – 10
8L6–81813–50	36 – 11
84N–81826–00	36 – 14
73A–81829–00	36 – 8
73A–81829–50	36 – 5
84N–81832–51	36 – 3
8L6–81833–50	36 – 19
8L6–81834–50	36 – 13
8L6–81835–50	36 – 18
8BB–81836–00	36 – 16
8L6–81840–50	36 – 9
4H7–81843–50	36 – 17
4H7–81844–50	36 – 12
73A–81847–00	36 – 6
8L6–81847–50	36 – 15
8Y3–81850–50	36 – 2
8BB–8185A–00	36 – 20
4H7–81872–00	36 – 7
82M–81910–A0	41 – 15
50W–81940–10	41 – 29
8AC–81970–00	41 – 27
5E3–82110–81	41 – 22
8R4–82113–00	40 – 4
88N–82115–00	41 – 31
88N–82116–00	36 – 23
83R–82117–01	36 – 22
84N–82122–00	41 – 32
4J2–82131–01	15 – 3
8Y7–82133–00	41 – 34
8AC–82136–10	41 – 33
8BE–82150–00	41 – 25
42X–82151–00	41 – 26
5JJ–82151–50	43 – 5
88T–82310–01	41 – 1
87L–82318–00	41 – 39

PART NO.	REF. NO.
89L–82318–00	40 – 26
8AC–82355–00	41 – 37
8AC–8235W–00	41 – 23
861–82361–00	41 – 4
8K1–82370–20	41 – 5
8G5–82372–00	41 – 6
8AC–82509–10	43 – 4
8K1–82510–20	41 – 9
8R4–8252V–00	40 – 8
88R–82530–00	40 – 11
4KD–82540–00	41 – 40
8H8–82550–01	40 – 23
8H7–82552–01	40 – 25
8H8–82557–00	40 – 24
8AU–82575–09	40 – 14
526–82579–00	41 – 10
8KA–82590–00	41 – 18
8Y0–82599–00	35 – 12
87S–8259A–01	7 – 29
8AU–82720–02	40 – 12
8JD–82917–00	41 – 14
8AU–82970–02	40 – 16
3MX–83371–11	43 – 2
87L–83383–01	41 – 11
8JD–833A0–00	43 – 1
85L–83509–00	37 – 10
	37 – 10
86V–83510–20	37 – 1
4R0–83517–00	37 – 3
	37 – 11
	37 – 11
8G6–83523–00	37 – 4
8V7–83536–40	37 – 2
85L–83540–00	37 – 9
	37 – 9
8H4–83560–00	37 – 8
8K1–83603–00	37 – 7
85G–83663–00	40 – 20
8H8–83912–00	40 – 2
802–83913–00	40 – 7
8R6–83928–00	40 – 15
437–83936–01	22 – 9
	38 – 19
	43 – 7
8K4–83950–01	40 – 10
8JN–83955–00	42 – 5
85G–83956–00	40 – 21
8AU–83963–00	40 – 13

PART NO.	REF. NO.
8FR–83976–02	43 – 3
88T–8399F–00	40 – 22
498–84145–60	38 – 8
498–84163–60	38 – 10
498–84164–60	38 – 9
84R–8430A–A0	38 – 1
83R–8430A–G0	38 – 1
83R–8430M–00	38 – 11
2F9–84314–00	38 – 6
51L–8431U–00	38 – 3
36Y–84324–00	38 – 5
26H–8432M–00	38 – 13
51L–84332–00	38 – 2
51L–84334–00	38 – 4
36Y–84354–00	38 – 16
8JD–84359–00	38 – 18
36Y–84397–00	38 – 7
8JN–84710–00	39 – 1
8K4–84711–01	39 – 3
1A2–84714–41	39 – 2
8AC–84717–01	41 – 21
8K4–84718–00	39 – 7
87M–84723–00	39 – 6
8K4–84733–01	39 – 4
8GM–85110–00	42 – 1
	42 – 3
3Y6–85130–02	42 – 6
81L–85520–M0	35 – 3
8AU–85540–00	41 – 7
2A7–85546–00	41 – 8
8AT–85550–01	35 – 1
8AT–85560–10	35 – 2
8R4–85580–M0	35 – 6
8GJ–W176G–02	45 – 1
8ET–W176H–00	46 – 1
8JD–W2190–01	15 – 1
8E1–W2628–00	44 – 1
83R–W4751–10	26 – 1
8JD–W7726–00	29 – 2
88R–W8291–00	40 – 1
8K4–W8393–00	40 – 6
90101–08005	17 – 11
90101–10357	27 – 48
90101–27001	27 – 50
90102–10039	16 – 49
90102–10044	17 – 27
90102–10067	16 – 50
	17 – 24

PART NO.	REF. NO.
90105–05644	11 – 6
	11 – 12
	45 – 6
	46 – 4
90105–06405	28 – 5
90105–06437	20 – 8
90105–08364	17 – 7
90105–08408	15 – 29
	33 – 3
90105–10237	23 – 48
	24 – 12
	24 – 60
	25 – 15
90105–10288	24 – 38
90105–10329	24 – 8
90105–10339	23 – 24
90105–10390	24 – 30
	24 – 39
90105–10410	16 – 18
90105–14003	28 – 8
90109–065E6	6 – 28
90109–08186	24 – 45
90109–10030	23 – 20
	24 – 5
90113–06039	16 – 56
	23 – 19
90116–08104	1 – 5
90116–08302	1 – 13
90119–06108	3 – 32
90122–05022	29 – 26
90149–08230	33 – 4
90151–06010	23 – 3
90154–05047	31 – 3
90154–06050	28 – 19
90154–06062	12 – 4
90157–05027	40 – 3
90159–05129	35 – 8
90159–05130	35 – 7
90170–08261	28 – 43
90170–10186	17 – 18
	17 – 23
90170–16425	2 – 28
	3 – 20
90170–25367	26 – 8
90176–05059	31 – 4
90176–08063	33 – 20
90179–08044	1 – 14
90179–08269	1 – 7

PART NO.	REF. NO.
90185–08054	17 – 12
90185–10085	17 – 29
90185–12058	25 – 7
90201–04027	15 – 17
	15 – 52
90201–042E0	15 – 67
90201–043H5	15 – 26
90201–043H7	29 – 31
	29 – 66
90201–047A2	34 – 18
90201–047R8	23 – 6
90201–05029	29 – 54
90201–05033	31 – 5
90201–05036	43 – 9
90201–054K4	34 – 26
90201–06042	29 – 52
90201–06043	35 – 14
90201–06072	28 – 4
90201–06078	29 – 39
	29 – 44
	29 – 48
90201–06081	24 – 17
90201–063A5	15 – 59
90201–064J1	28 – 35
90201–06557	29 – 58
90201–06778	15 – 58
90201–067F9	16 – 37
90201–08043	16 – 10
90201–08053	16 – 15
90201–080L1	16 – 31
90201–08100	1 – 8
90201–08624	4 – 14
90201–08759	17 – 28
90201–08766	38 – 17
90201–08784	19 – 21
90201–10043	24 – 37
90201–10051	23 – 25
90201–10052	23 – 46
90201–10072	23 – 21
	24 – 9
90201–100S7	16 – 20
90201–10119	5 – 17
90201–10126	24 – 11
90201–101U2	23 – 29
	23 – 37
90201–10321	13 – 11
90201–104A7	12 – 20
90201–10742	25 – 12

PART NO.	REF. NO.
90201–107G8	13 – 10
90201–12047	24 – 48
90201–12178	25 – 10
90201–12317	13 – 12
90201–12426	25 – 6
90201–144J2	28 – 33
90201–171J5	27 – 30
90201–17713	3 – 13
	3 – 19
90201–20022	23 – 53
	23 – 58
90201–20792	27 – 16
	27 – 28
90201–224L4	27 – 8
	27 – 14
	27 – 22
90201–225L2	27 – 23
90201–252F1	12 – 17
90201–25526	12 – 17
90201–25527	12 – 17
90201–257G7	13 – 9
90201–257J2	12 – 18
90201–33299	2 – 18
90201–345G2	12 – 6
90201–535H6	16 – 41
90201–536A1	16 – 41
90202–05088	29 – 29
90202–08204	11 – 21
	45 – 16
90202–09227	11 – 18
	45 – 15
	46 – 7
90202–14037	16 – 52
90206–11016	5 – 6
90208–25045	26 – 7
90209–24073	2 – 11
90210–10004	27 – 46
90214–10003	23 – 39
90214–10004	23 – 31
90214–10007	24 – 59
90214–17017	3 – 17
90214–17018	3 – 17
90214–29060	12 – 7
90215–27004	27 – 51
90249–03017	19 – 11
90249–03175	19 – 10
90249–12006	25 – 8
90249–12216	27 – 44

PART NO.	REF. NO.
90261–06015	11 – 24
90261–06019	11 – 24
90261–06033	11 – 24
90267–40029	15 – 23
90267–40172	15 – 66
90267–47186	15 – 69
	43 – 10
90267–48014	22 – 10
90267–48018	15 – 16
	15 – 51
	29 – 18
90267–48023	15 – 71
90267–48051	15 – 15
90267–48060	15 – 14
	20 – 6
90267–48079	29 – 30
90267–48086	33 – 22
90267–48194	23 – 5
90267–48199	23 – 9
	23 – 13
90267–49152	15 – 9
90269–05039	29 – 36
90269–05051	3 – 37
90269–05055	34 – 21
	34 – 28
90280–05002	2 – 27
90280–05014	2 – 24
	3 – 15
90338–21075	4 – 2
90338–30219	27 – 55
90338–44093	15 – 44
90380–10129	13 – 8
90380–28237	11 – 15
	46 – 6
90381–14101	24 – 20
90381–19111	24 – 56
	25 – 14
90381–28108	24 – 53
90383–22001	24 – 3
90384–14091	16 – 45
	16 – 57
90384–14096	16 – 46
90384–36134	15 – 33
90384–41242	11 – 4
	46 – 2
90384–53175	16 – 39
90384–90081	12 – 5
90386–08002	11 – 23

PART NO.	REF. NO.
90386–09001	11 – 20
90386–16001	24 – 35
90387–0514T	11 – 5
	45 – 5
90387–0514U	11 – 11
	45 – 11
	46 – 3
90387–060U0	34 – 11
90387–061U9	14 – 17
90387–06241	29 – 59
90387–06299	35 – 11
90387–063W4	6 – 31
90387–066N1	39 – 9
90387–081R2	15 – 11
90387–084R1	16 – 28
90387–09018	16 – 9
90387–10022	24 – 7
90387–10023	24 – 33
90387–10054	24 – 29
90387–100A4	16 – 48
90387–101A1	24 – 36
90387–101Y9	16 – 47
90387–105G5	23 – 23
	24 – 21
90387–106J3	16 – 21
90387–121E8	27 – 41
90387–145T7	28 – 32
90387–19002	24 – 13
90387–19007	24 – 14
90387–20022	23 – 52
	23 – 57
90387–20023	23 – 56
90387–220X0	22 – 11
90387–226V7	27 – 15
90387–405T8	28 – 12
90430–04004	4 – 8
90430–06016	27 – 54
90430–14194	28 – 9
90430–31003	14 – 5
90445–092K1	6 – 37
90445–095F1	19 – 26
90445–114J9	19 – 31
90445–114K5	6 – 40
90445–115K6	19 – 25
90445–11735	6 – 34
90450–99050	6 – 18
90460–56073	6 – 15
90460–68230	6 – 17

PART NO.	REF. NO.
90461–08113	29 – 64
90461–10011	6 – 9
90462–05059	15 – 13
90462–10209	14 – 2
90464–13073	41 – 20
90464–13077	41 – 38
90464–15195	19 – 18
	41 – 19
90464–16039	4 – 22
90465–08125	15 – 55
90465–08277	6 – 8
90465–08316	6 – 32
	12 – 22
90465–08368	15 – 12
90465–10098	39 – 8
90465–10189	22 – 2
90467–08017	14 – 21
90467–09026	6 – 39
	14 – 9
	19 – 24
90467–11009	6 – 42
	19 – 22
90467–11032	6 – 36
	6 – 41
	14 – 8
	19 – 16
	19 – 23
90468–02025	4 – 7
	4 – 18
90468–10003	29 – 27
90480–10348	15 – 61
90480–12012	34 – 30
90480–12314	41 – 24
90480–15061	15 – 45
90480–15268	33 – 23
90480–16501	24 – 47
90501–02217	4 – 4
90501–083J9	19 – 28
90501–084G9	6 – 35
90501–084J0	6 – 38
90501–101A7	28 – 28
90501–147A6	28 – 7
90501–20130	19 – 5
90501–380A0	25 – 5
90501–556G6	11 – 25
90501–556G7	11 – 25
90501–606G9	11 – 25
90501–75612	16 – 25

PART NO.	REF. NO.
90506–06065	19 – 14
90506–20272	8 – 4
90507–16045	8 – 7
90507–16046	8 – 8
90508–10715	19 – 9
90508–55012	12 – 10
90793–26072	41 – 22
91312–06025	28 – 39
91401–16025	3 – 29
	3 – 31
91401–20020	16 – 22
	16 – 53
91401–25020	17 – 26
91609–25050	19 – 7
91609–30010	2 – 15
	22 – 7
91609–30016	19 – 6
91609–50032	11 – 10
	45 – 10
91830–22016	9 – 2
91A20–05065	19 – 26
91A21–05155	19 – 27
91A30–03042	4 – 5
91A30–05004	14 – 15
91A30–05010	14 – 10
91A30–05052	14 – 19
91A30–05060	14 – 20
91A30–05085	14 – 12
91A30–05120	14 – 11
91A30–07016	14 – 13
92502–06020	29 – 14
92901–05100	4 – 12
92901–06100	10 – 10
92902–03100	6 – 5
92902–05100	37 – 6
92902–05200	40 – 9
92902–05600	6 – 25
92902–06100	29 – 40
92902–06200	29 – 10
92902–06600	28 – 38
	29 – 15
	41 – 35
92902–08600	3 – 7
	16 – 60
92902–10600	23 – 62
92907–05100	4 – 16
	29 – 28
92907–06600	6 – 11

PART NO.	REF. NO.
92907–06600	10 – 17
	11 – 17
	45 – 14
92907–08100	33 – 9
92907–08200	33 – 8
92907–08600	3 – 5
	3 – 9
	6 – 14
	12 – 16
	33 – 27
	38 – 15
92907–16100	2 – 29
	3 – 18
	11 – 28
	45 – 18
92990–05100	37 – 13
	37 – 13
92990–06600	41 – 3
93101–10001	5 – 2
93102–15212	28 – 3
93102–20010	27 – 34
93102–22014	27 – 5
93102–36232	15 – 34
93102–46394	28 – 16
93103–32095	2 – 21
93103–32156	2 – 26
93103–36117	15 – 35
93109–53036	16 – 40
93210–10010	28 – 34
93210–19123	28 – 21
93210–28763	28 – 14
93306–00002	5 – 15
93306–00444	23 – 42
93306–00507	26 – 6
93306–20315	3 – 11
93306–20321	27 – 18
	27 – 32
93306–20402	27 – 3
	27 – 33
93306–20582	12 – 13
93306–20617	2 – 19
93306–20620	2 – 20
93306–30627	2 – 16
93306–30628	2 – 17
93306–37206	27 – 4
93306–90802	28 – 15
93310–212R6	27 – 43
93310–320G0	2 – 5

PART NO.	REF. NO.
93310–524K4	2 – 13
93311–42265	27 – 7
93317–22021	27 – 27
93317–222B2	27 – 59
93317–32241	27 – 13
	27 – 21
93410–25017	12 – 19
93410–52061	15 – 41
	16 – 42
93430–02001	19 – 12
93440–34170	12 – 8
93440–78069	2 – 25
93450–21053	2 – 4
93503–08007	28 – 6
93505–32002	4 – 3
93603–22028	5 – 9
93604–07141	9 – 3
93612–44229	27 – 40
93700–06004	16 – 38
94591–63070	28 – 11
94702–00188	1 – 2
94709–00188	1 – 2
95022–06040	5 – 12
95022–06055	5 – 13
95301–05600	4 – 13
95301–06700	10 – 11
95302–05600	37 – 5
95302–05700	6 – 26
95302–06600	29 – 41
95302–08600	16 – 30
95302–10700	27 – 47
95307–06600	36 – 21
95307–08800	33 – 10
95307–10700	17 – 17
	17 – 22
95312–08600	28 – 42
95380–05600	37 – 12
	37 – 12
95602–05200	11 – 7
	11 – 13
	42 – 2
95602–06100	14 – 16
	39 – 10
95602–06200	41 – 13
95602–08200	8 – 3
	24 – 46
	33 – 14
95602–10200	16 – 19

PART NO.	REF. NO.
95602–10200	23 – 26
	23 – 32
	23 – 40
	24 – 24
	24 – 31
	24 – 40
95602–14200	23 – 54
	23 – 60
95607–05200	45 – 7
	46 – 5
95612–08318	1 – 11
95617–08640	16 – 59
95617–08655	16 – 58
95702–04300	34 – 19
95702–05300	29 – 55
	40 – 5
95702–05500	42 – 4
	42 – 7
95702–06300	15 – 60
	24 – 18
	29 – 11
	29 – 23
	29 – 45
	29 – 49
	34 – 16
	41 – 17
	41 – 36
95702–06500	6 – 33
	28 – 36
	28 – 41
	28 – 46
	29 – 60
	41 – 30
95702–08300	16 – 11
	16 – 61
	19 – 20
95702–08500	33 – 5
95702–10300	23 – 63
95702–10500	13 – 13
95702–12500	13 – 14
95707–04500	44 – 5
95707–05300	15 – 32
	34 – 27
95707–08500	1 – 6
95707–10300	16 – 51
	17 – 25
95717–08300	33 – 26
95802–06012	15 – 38

PART NO.	REF. NO.
95802–06016	14 – 18
	34 – 15
95802–06020	41 – 28
95802–06025	3 – 39
95802–08016	18 – 2
95807–08045	33 – 19
95812–06035	27 – 58
95812–06045	27 – 56
95812–08040	28 – 23
95812–10020	12 – 21
	24 – 26
95812–10045	13 – 7
	23 – 45
	24 – 22
95812–10070	24 – 23
95812–10080	23 – 30
	23 – 38
	24 – 27
95822–06016	41 – 12
	43 – 6
95822–06030	9 – 6
95822–08014	26 – 9
	33 – 7
95822–08016	9 – 8
	10 – 19
95827–06016	15 – 18
95827–08020	33 – 11
	33 – 13
95827–08025	33 – 25
95827–08075	9 – 4
95827–08085	9 – 5
95827–10050	21 – 17
97002–06014	41 – 16
97002–06025	24 – 16
97007–06010	27 – 52
97007–06014	10 – 16
97007–08025	6 – 13
97007–08040	38 – 14
97017–06030	11 – 16
	45 – 13
97022–06020	16 – 34
97022–06025	15 – 57
97022–08055	3 – 6
97027–06025	6 – 10
97027–08020	12 – 15
97027–08040	3 – 4
97027–08075	3 – 8
	3 – 10

PART NO.	REF. NO.	PART NO.	REF. NO.	PART NO.	REF. NO.	PART NO.	REF. NO.	PART NO.	REF. NO.	PART NO.	REF. NO.
97607–04108	35 – 10										
97607–04112	35 – 9										
97701–40130	39 – 5										
97702–50016	29 – 19										
	29 – 65										
97706–30620	40 – 17										
97706–30630	40 – 18										
97707–40616	38 – 12										
97880–06020	41 – 2										
98502–03008	6 – 4										
98502–05016	6 – 24										
98502–06010	6 – 27										
98507–04016	44 – 4										
98507–04018	4 – 20										
98507–05016	4 – 15										
98707–04016	34 – 17										
98707–05016	29 – 53										
98902–04020	4 – 9										
98902–06010	14 – 3										
98902–06014	29 – 37										
98902–06025	3 – 38										
98907–05012	29 – 51										
98907–05014	15 – 31										
98907–05016	34 – 25										
98907–06008	27 – 53										
98907–06014	29 – 22										
98907–06016	34 – 10										
	35 – 13										
98907–06025	29 – 57										
98907–06035	15 – 40										
99001–04600	40 – 19										
99009–10400	5 – 8										
99009–12400	25 – 9										
	27 – 45										
99009–14400	24 – 43										
99009–20400	27 – 29										
99009–22400	27 – 9										
	27 – 24										
99009–35400	23 – 35										
99009–40500	3 – 12										
99009–42500	23 – 43										
99009–52500	12 – 14										
99246–00080	3 – 24										
99246–00120	31 – 7										
99246–00280	30 – 1										
99530–08016	5 – 11										
99530–10114	27 – 57										